ORDER NO. MD0602028C3

# Service Manual

## CD Stereo System

## SA-PM3GD / SA-PM3GN

**Colour**

**(S)... Silver Type**

## SPECIFICATIONS

**Specification**

| | |
|---|---|
| RMS OUTPUT POWER both channel driven simultaneously | |
| 10% total harmonic distortion | 5.0 W per channel (6 ) |
| PMPO output power | 45 W (GD) |
| Output impedance | |
| HEADPHONE | 16 to 32 |
| Phone jack | |
| Terminal | Stereo, 3.5 mm |

■ FM Tuner Section

| | |
|---|---|
| Frequency range | 87.50 to 108.00 MHz / (50 kHz step) |
| Sensitivity | 1.4 V (IHF) |
| S/N 26 dB | 1.0 V |
| Antenna terminals | 75 (unbalanced) |
| Preset station | FM 15 stations |
| | AM 15 stations |

■ AM Tuner Section

| | |
|---|---|
| Frequency range | 522 to 1629 kHz / (9 kHz steps) |
| | 520 to 1630 kHz / (10 kHz steps) |
| Sensitivity | |
| S/N 20 dB (at 999 kHz) | 902 V/m |

■ Cassette Deck Section

| | |
|---|---|
| Track system | 4-track, 2-channel |
| Heads | |
| Record/playback | Solid permalloy head |
| Erasure | Double gap ferrite head |
| Motor | DC servo motor |
| Recording system | AC bias 100 kHz |
| Erase system | AC erase 100 kHz |
| Tape speed | 4.8 cm/s |
| Overall frequency response (+3 dB, -6 dB) at DECK OUT | |
| Normal | 35 Hz to 14 kHz |
| S/N RATIO | 47 dB (A weighted) |
| Wow and flutter | 0.09% (WRMS) |
| Fast-forward and rewind time | Approx. 120 seconds with C-60 cassette tape |

CD Section

| | |
|---|---|
| Disc played [8 cm or 12 cm] | |
| (1) CD-Audio (CD-DA) | |
| (2) CD-R/RW (CD-DA, MP3 formatted disc) | |
| (3) MP3 | |
| Sampling frequency | |
| CD | 44.1 kHz |
| MP3 | 32 kHz, 44.1 kHz, 48 kHz |
| Bit rate | |
| MP3 | 32 kbps to 384 kbps |
| Decoding | 16/20/24 bit linear |
| Pickup | |
| Wavelength | 785 nm |

| | |
|---|---|
| Wavelength | 790 nm |
| Beam source | Semiconductor laser |
| Laser power | CLASS 1 |
| Audio output (Disc) | |
| Number of channels | 2 channel |
| Frequency response | 20 Hz to 20 kHz (+1dB, -2dB) |
| Wow and flutter | Below measurable limit |
| Digital filter | 8 fs |
| D/A converter | MASH (1 bit DAC) |

■ General

| | |
|---|---|
| Power supply | AC 220 V, 60 Hz (GD) |
| | AC 230 to 240 V, 50 Hz (GN) |
| Power consumption | 30 W |
| Dimensions (W x H x D) | 165 x 227 x 285 mm |
| Mass | 2.8 kg |
| Operating temperature range | +5 to +35°C |
| Operation humidity range | 5 to 90% RH (no condensation) |
| Power consumption in standby mode | 0.8 W |

Notes :

1. Specifications are subject to change without notices. Mass and dimensions are approximate.
2. Total harmonic distortion is measured by the digital spectrum analyzer.

| | |
|---|---|
| ■ System : SC-PM3GN-S | Music center: SA-PM3GN-S |
| | Speaker: SB-PM3EG-M |
| ■ System : SC-PM3GD-S | Music center: SA-PM3GD-S |
| | Speaker: SB-PM3GD-M |

© 2006 Matsushita Electric Industrial Co. Ltd.. All rights reserved. Unauthorized copying and distribution is a violation of law.

# 1. Safety Precautions

## 1.1. General Guidelines

1. When servicing, observe the original lead dress. If a short circuit is found, replace all parts which have been overheated or damaged by the short circuit.
2. After servicing, ensure that all the protective devices such as insulation barriers, insulation papers shields are properly installed.

3. After servicing, check for leakage current checks to prevent from being exposed to shock hazards.

### 1.1.1. Leakage Current Cold Check

1. Unplug the AC cord and connect a jumper between the two prongs on the plug.
2. Using an ohmmeter measure the resistance value, between the jumpered AC plug and each exposed metallic cabinet part on the equipment such as screwheads, connectors, control shafts, etc. When the exposed metallic part has a return path to the chassis, the reading should be between 1M Ω and 5.2 Ω . / When the exposed metal does not have a return path to the chassis, the reading must be .

Figure 1

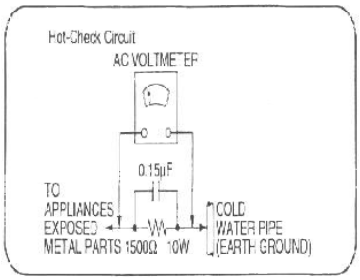


### 1.1.2. Leakage Current Hot Check (See Figure 1)

1. Plug the AC cord directly into the AC outlet. Do not use an isolation transformer for this check.
2. Connect a 1.5k , 10 watts resistor, in parallel with a 0.15 F capacitors, between each exposed metallic part on the set and a good earth ground such as a water pipe, as shown in Figure 1.
3. Use an AC voltmeter, with 1000 ohms/volt or more sensitivity, to measure the potential across the resistor.
4. Check each exposed metallic part, and measure the voltage at each point.
5. Reverse the AC plug in the AC outlet and repeat each of the above measurements.
6. The potential at any point should not exceed 0.75 volts RMS. A leakage current tester (Simpson Model 229 or equivalent) may be used to make the hot checks, leakage current must not exceed 1/2 milliamp. should the measurement is outside of the limits specified, there is a possibility

of a shock hazard, and the equipment should be repaired and re-checked before it is returned to the customer.

### 1.2. Before Repair and Adjustment

Disconnect AC power, discharge Power Supply Capacitors C272, C472, C501, C909, C910, C911 & C923 through a 10 Ω, 1W resistor to ground.
DO NOT SHORT-CIRCUIT DIRECTLY (with a screwdriver blade, for instance), as this may destroy solid state devices.
After repairs are completed, restore power gradually using a variac, to avoid overcurrent.

- Current consumption at AC 220 V, 60 Hz in NO SIGNAL mode should be ~300 mA. (GD)
- Current consumption at AC 230-240 V, 50 Hz in NO SIGNAL mode should be ~250 mA. (GN)

### 1.3. Protection Circuitry

The protection circuitry may have operated if either of the following conditions are noticed:

- No sound is heard when the power is turned on.
- Sound stops during a performance.

The function of this circuitry is to prevent circuitry damage if, for example, the positive and negative speaker connection wires are "shorted", or if speaker systems with an impedance less than the indicated rated impedance of the amplifier are used.
If this occurs, follow the procedure outlines below:

1. Turn off the power.
2. Determine the cause of the problem and correct it.
3. Turn on the power once again after one minute.

Note:
When the protection circuitry functions, the unit will not operate unless the power is first turned off and then on again.

## 2. Prevention of Electro Static Discharge (ESD) to Electrostatically Sensitive (ES) Devices

Some semiconductor (solid state) devices can be damaged easily by electricity. Such components commonly are called Electrostatically Sensitive (ES) Devices. Examples of typical ES devices are integrated circuits and some field-effect transistors and semiconductor “chip” components. The following techniques should be used to help reduce the incidence of component damage caused by electro static discharge (ESD).

1. Immediately before handling any semiconductor component or semiconductor-equiped assembly, drain off any ESD on your body by touching a known earth ground. Alternatively, obtain and wear a commercially available discharging ESD wrist strap, which should be removed for potential shock reasons prior to applying power to the unit under test.
2. After removing an electrical assembly equiped with ES devices, place

the assembly on a conductive surface such as aluminium foil, to prevent electrostatic charge build up or exposure of the assembly.

3. Use only a grounded-tip soldering iron to solder or unsolder ES devices.
4. Use only an anti-static solder remover device. Some solder removal devices not classified as “anti-static (ESD protected)” can generate electrical charge to damage ES devices.
5. Do not use freon-propelled chemicals. These can generate electrical charges sufficient to damage ES devices.
6. Do not remove a replacement ES device from its protective package until immediately before you are ready to install it. (Most replacement ES devices are packaged with leads electrically shorted together by conductive foam, aluminium foil or comparable conductive material).
7. Immediately before removing the protective material from the leads of a replacement ES device, touch the protective material to the chassis or circuit assembly into which the device will be installed.

   **Caution**

   Be sure no power is applied to the chassis or circuit, and observe all other safety precautions.
8. Minimize body motions when handling unpackaged replacement ES devices. (Otherwise harmless motion such as the brushing together of your clothes fabric or the lifting of your foot from a carpeted floor can generate static electricity (ESD) sufficient to damage an ES device).

## 3. Precaution of Laser Diode

**CAUTION:**

This unit utilizes a class 1 laser.
Invisible laser radiation is emitted from the optical pickup lens.
When the unit is turned on:

1. Do not look directly into the pick up lens.
2. Do not use optical instruments to look at the pick up lens.
3. Do not adjust the preset variable resistor on the pickup lens.

4. Do not disassemble the optical pick up unit.
5. If the optical pick up is replaced, use the manufacturer's specified replacement pick up only.
6. Use of control or adjustments or performance of procedures other than those specified herein may result in hazardous radiation exposure.

**CAUTION!**

**THIS PRODUCT UTILIZES A LASER.**
**USE OF CONTROLS OR ADJUSTMENTS OR PERFORMANCE OF PROCEDURES OTHER THAN THOSE SPECIFIED HEREIN MAY RESULT IN HAZARDOUS RADIATION EXPOSURE.**

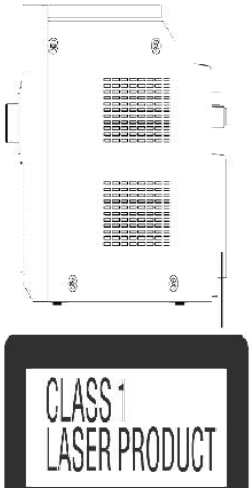


# 4. Handling Precautions For Traverse Deck

**The laser diode in the traverse deck (optical pickup) may break down due to potential difference caused by static electricity of clothes or human body.**
**So, be careful of electrostatic breakdown during repair of the traverse deck (optical pickup).**

**Handling of CD traverse deck (optical pickup)**

1. Do not subject the traverse deck (optical pickup) to static electricity as it is extremely sensitive to electrical shock.
2. The short land between the No.4 (LD) and No.5 (GND) pins on the flexible board (FFC) is shorted with a solder build-up to prevent

damage to the laser diode.

3. Take care not to apply excessive stress to the flexible board (FFC board) (Fig 4.1).
4. Do not turn the variable resistor (laser power adjustment). It has already been adjusted.

Fig 4.1

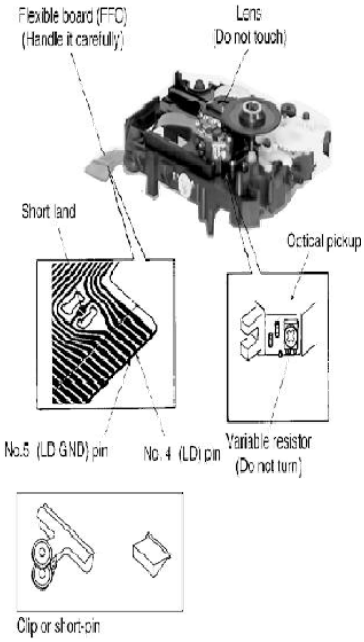


- Grounding for electrostatic breakdown prevention

1. Human body grounding (Fig 4.2)
   Use the anti-static wrist strap to discharge the static electricity from your body.
2. Work table grounding (Fig 4.2)
   Put a conductive material (sheet) or steel sheet on the area where the traverse deck (optical pickup) is placed, and ground the sheet.

**Caution :**

The static electricity of your clothes will not be grounded through the wrist strap. So, take care not to let your clothes touch the traverse deck (optical pickup).

Fig 4.2

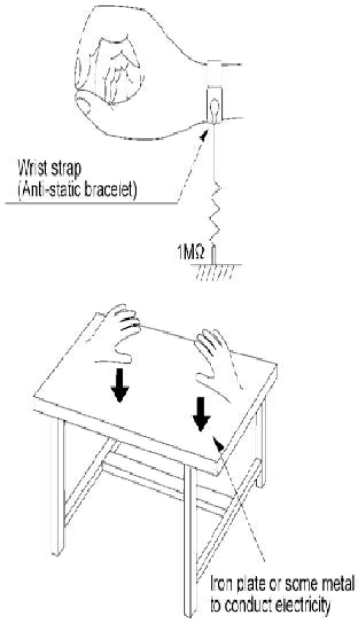


**Caution when Replacing the Optical Pickup :**

**The traverse has a short point shorted with solder to protect the laser diode against electrostatics breakdown. Be sure to remove the solder from the short point before making connections.**

# 5. Handling the Lead-free Solder

## 5.1. About lead free solder (PbF)

**Distinction of PbF P.C.B.:**

**P.C.B.s (manufactured) using lead free solder will have a PbF stamp on the P.C.B.**

**Caution:**

- **Pb free solder has a higher melting point than standard solder; Typically the melting point is 50 - 70°F (30 - 40°C) higher. Please use a high temperature soldering iron. In case of soldering iron with temperature control, please set it to 700 ± 20°F (370 ± 10°C).**
- **Pb free solder will tend to splash when heated too high (about 1100°F/ 600°C).**
- **When soldering or unsoldering, please completely remove all of the solder on the pins or solder area, and be sure to heat the soldering points with the Pb free solder until it melts enough.**

# 6. Accessories

**Note : Refer to Packing Materials & Accessories (Section 24) for part number.**

**Remote control**

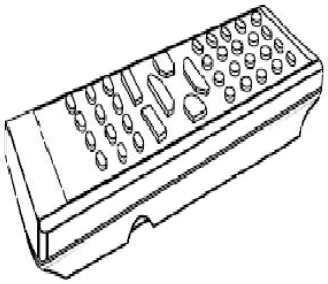

**AC cord (For GN only)**

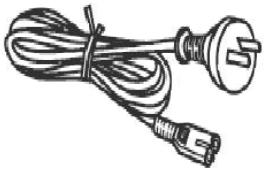

**AC cord (For GD only)**

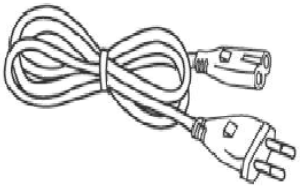

**FM indoor antenna**

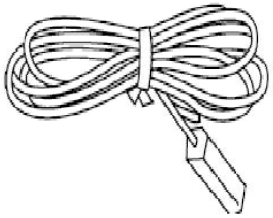

**AM loop antenna**

# 7. Operating Instructions Procedures

## 7.1. Main Unit & Remote Control Operation

## 7.2. Disc Information

# 8. Self diagnosis and special mode setting

**This unit is equipped with features of self-diagnostic & special mode setting for checking the functions & reliability.**

## 8.1. Special Mode Table

**Below is the various special modes for checking:-**

| Item | | FL Display | Key Operation |
|---|---|---|---|
| Mode Name | Description | | Front Key |
| Self - Diagnostic Mode | To enter into self diagnostic checking for main unit. | | 1. Select [ ] for CD mode (Ensure no tape or CD inserted).<br>2. Press and hold [ button for 2 seconds follow by [ ].<br>To exit, press buttor on main unit or remote control. |
| Doctor Mode | To enter into Doctor Mode for checking of various items and displaying EEPROM and firmware version. (For more information, refer to section 8.1.2)<br><br>Note: The micro-processor version as shown is an example. It will be revise when there is an updates. | 1.<br>2.<br>The Check Sum of EEPROM and firmware version will be display for 1 sec.<br><br>* ROM correction<br>** Firmware version No: | In any mode:<br>1. Press [ ] butt on main unit follow by [4] and [7] on remote control.<br>To exit, press buttor on main unit or remote control. |
| FL Display Test | To check the FL segments display (All segments will light up) | | In doctor mode:<br>1. Press [DIMMER] button on remote control.<br>To exit, press buttor on main unit or remote control. |
| CD to Tape Recording Test Mode | To Inspect the recording process from CD to TAPE for the unit. (For more information, refer to section 8.1.3) | | In doctor mode:<br>1. Press [4] button on remote control.<br>To exit, press buttor on main unit or remote control. |

| Item | | FL Display | Key Operation |
|---|---|---|---|
| Mode Name | Description | | Front Key |
| Tape Recording and Playing | To Inspect the Tape recording and playing is process for unit. (For more information, refer to section 8.1.4) | NO TAPE | In doctor mode:<br>1. Press [5] button on remote control.<br><br>To exit, press buttor on main unit or remote control. |
| Tape Eject test | To check on the tape eject function. | EJECT | In doctor mode:<br>1. Press [6] button on remote control.<br><br>To exit, press buttor on main unit or remote control. |
| Volume Setting | To Forced Volume Setting. | 1.<br>2.<br>3. | In doctor mode:<br>1. Press [7] button on remote control.<br>2. Press [8] button on remote control.<br>3. Press [9] button on remote control.<br><br>To exit, press buttor on main unit or remote control. |
| Traverse Test | To determine the reliability of CD unit. | 00000001<br>The counter will increment by one. when reach 99999999 will change to 00000000 | In doctor Mode:<br>1. Press [ ], [1], [2] button on remote control.<br><br>To exit, press buttor on main unit or remote control. |
| TPS | To check FF TPS for deck. (For more information, refer to section 8.1.5) | | In doctor mode:<br>1. Press [ button on remote control.<br><br>To exit, press buttor on main unit or remote control. |
| Cold Start | To activate cold start ipon next AC power up. | | In doctor mode:<br>1. Press [SLEEP] button on remote control.<br><br>To exit, press buttor on main unit or remote control. |

### 8.1.1. Cassette Mechanism Self-Diagnostic Mode

**Below is information of the checking of cassette deck mechanism**

| No. | Operation Procedures | Micon operation & processing |
|---|---|---|
| 1 | C-mecha Abnormal Detection shall be executed for DECK. | Check that all DECK mechanism leaf SW is in OFF state. |
| 2 | [ ∧/FF/►►\| ] key is pressed, after loading in a NORMAL type cassette with the recording tab on the left side removed. | FF shall be executed for 2 sec, after which STOP. / Check the following. / { F.REC INH SW } is OFF / { HALF SW } is ON / Reel pulse toggles between H & L. |
| 3 | [ ∨/REW/\|◄◄ ] key is pressed, after loading a NORMAL, CrO2, METAL type cassette with the recording tab on the right side removed. | REW shall be executed for 2 sec, after which STOP. / Check the following. / { F.REC INH SW } is ON / { HALF SW } is ON / Reel pulse toggles between H & L. |
| 4 | [TAPE ► ] Key is pressed, after loading in a NORMAL, CrO2, METAL type cassette ( cassette for TPS checking purposes and with both recording tabs intact ). | TPS operation is executed. Check the following. / { F.REC INH SW } is ON / { HALF SW } is ON / TPS signal changes. / After checking TPS, it shall STOP. / If TPS checking is completed at TAPE END, it is considered as TPS abnormal. |
| 5 | [REC] key is pressed, after loading in a NORMAL type cassette ( with both recording tabs intact ) | REC operation shall not be executed. / Check the following. / { F.REC INH SW } is ON / { HALF SW } is ON |
| 6 | Self-diagnostic mode is stopped by pressing the [ ] Key. | LCD shall display the abnormality item code, when the STOP key is pressed, it shall display the abnormality item code in the following sequence. / [ TEST H 0 1] [ TEST H 0 2] [ TEST H 0 3] |
| 7 | To clear all the abnormalities in the memory, press the [ ] Key for more than 5 Sec while the self-diagnostic mode is stopped. | At this time, all the abnormalities item in the memory is cleared and is displayed on the LCD.[ C L E A R ] display for 1 Sec. then,[ TEST ] is displayed. |
| 8 | To cancel the self-diagnostic mode press the Key. | POWER is OFF.At the next POWER ON, normal operation shall be executed. |

**- If RAM check error occurs during microcomputer reset, COLDSTART shall be executed and all the error memory shall be cleared during RAM initialization.**

### 8.1.2. EEPROM Checksum (ROM correction)

**Purpose : To check for micro-processor firmware version & EEPROM check (ROM correction).**
**Below is the procedures for this mode.**
**Step 1: Enter into Doctor mode (For more information refer to section 8.1 on key operation to enter into this mode.**
**Step 2: Check for firmware version & EEPROM checksum.**

- **When entering into DOCTOR MODE the firmware version & checksum of EEPROM (if applicable) will appear on FL display. Below is information on the EEPROM IC (Rom correction) under 3 examples:**

**1. When EEPROM IC is detected and there is no ROM correction:**

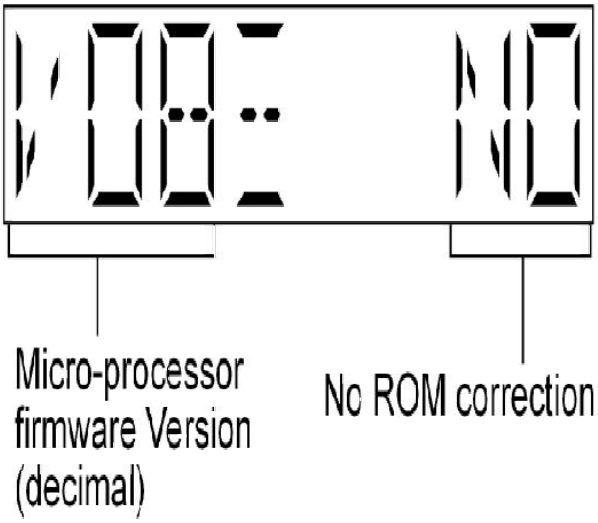


**2. When EEPROM IC is detected and has ROM correction:**

**3. When EEPROM IC is detected and has ROM correction but NG:**

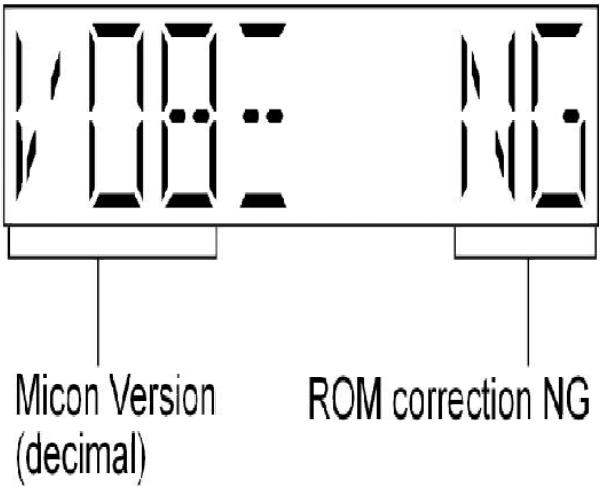


**Note: Micro-processor firmware version refers to version No. (Eg.MS079_12) for micro-processor IC. It is subject to change which would update accordingly.**

**- Rom correction checksum refers to the hex code that is display upon key buttons pressed if an EEPROM is loaded in the unit. (Main P.C.B)**

### 8.1.3. CD to Tape Recording Inspection

**Purpose : To check the recording function from CD to Tape.**
**Below is the procedures for this mode.**
**Procedure :**
**Step 1: Enter into Doctor mode (Refer section 8.1 Special Mode Table)**
**Step 2: Insert CDT-018 (Ensure TOC is completed) to CD unit before proceeding.**
**Step 3: Press [4] button on remote control. Enter into CD to Tape Test mode. (During this mode, volume is set to [VOLUME 50], Bass & Treble is set to 0dB & EQ is switch off).**
**Note : When in CD to Tape Recording Test mode, the following process is perform :**
**a) Deck will rewind to start point (point at the start of recording) & Stop.**
**b) Recording begins (at constant analogue recording speed) for 3 seconds & Stop.**

**- However, "Error" would be display if there is no tracks to access to, no tape inserted, no test CD inserted or when the tape erasure prevention tab for FWD side is not suitable for recording.**

**- When in this mode, if button is pressed the process will stops automatically.**

### 8.1.4. Tape Recording and Playing

**Purpose : To check the Tape function.**
**Assuming the recording to TAPE has been done in test 3, only playing TAPE is made.**
**Below is the procedures for this mode.**
**Procedure :**
**Step 1: Enter into Doctor mode (Refer section 8.1 Special Mode Table)**
**Step 2: Press [5] button on remote control. Enter into Tape recording Test mode. (During this mode, Tape function is set to automatically, volume is set to [VOLUME 50], Bass & Treble is set to 0dB & EQ is switch off).**
**Step 3: FWD play is made for 3 seconds after setting the above-mentioned, TAPE is stopped 3 seconds later. Tape should open.**
**Note : When in CD to Tape Recording Test mode, the following process is perform :**
**a) If the erasure prevention tab for FWD side the tape is broken, it is judged as an error and the**

**recording operation does not start.**
**b) If tape stops by detecting a tape end while recording, it becomes an error.**
**c) If STOP key is pressed while recording or playing, the operation shall be terminated by stopping TAPE. In this case, the doctor mode is not released.**
**d) DMT is output with the same timing as usual.**

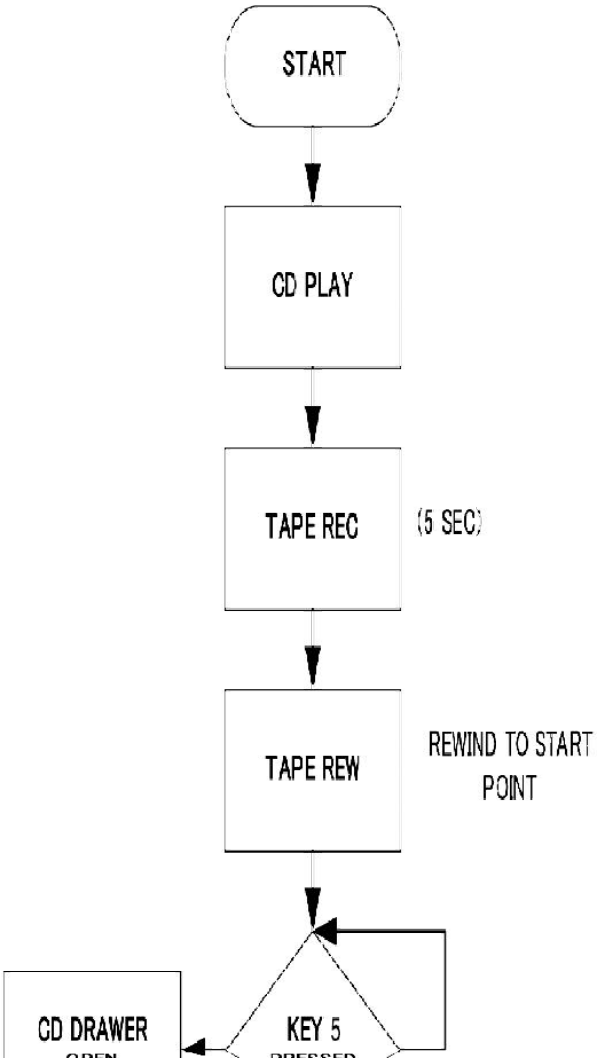
START
CD PLAY
TAPE REC
(5 SEC)
TAPE REW
REWIND TO START POINT
CD DRAWER
KEY 5

### 8.1.5. TPS Inspection

**Purpose : To check the TPS.**

**Below is the procedures for this mode.**

**Procedure :**

**Step 1: Enter into Doctor mode (Refer section 8.1 Special Mode Table)**

**Step 2: Press [ ^/FF/►►| ] button on remote control. Enter into TPS Test mode. (During this mode)**

- **Software will start checking for existence of cassette in Deck.**
- **If the Deck does not contain any cassette, it shall end the test and displays the result of the test.**
- **The test will start by playing the Deck in forward direction for 1 sec and then FF TPS.**
- **If TPS signal is OK, the Deck shall be ejected. Below is information on the TPS under 3 examples.**

1. **If ERROR Flag is set "ERROR" shall be displayed. TPS check result shall not be shown in this case.**

2. **If Deck TPS check = OK**

3. **If Deck TPS check = NG**

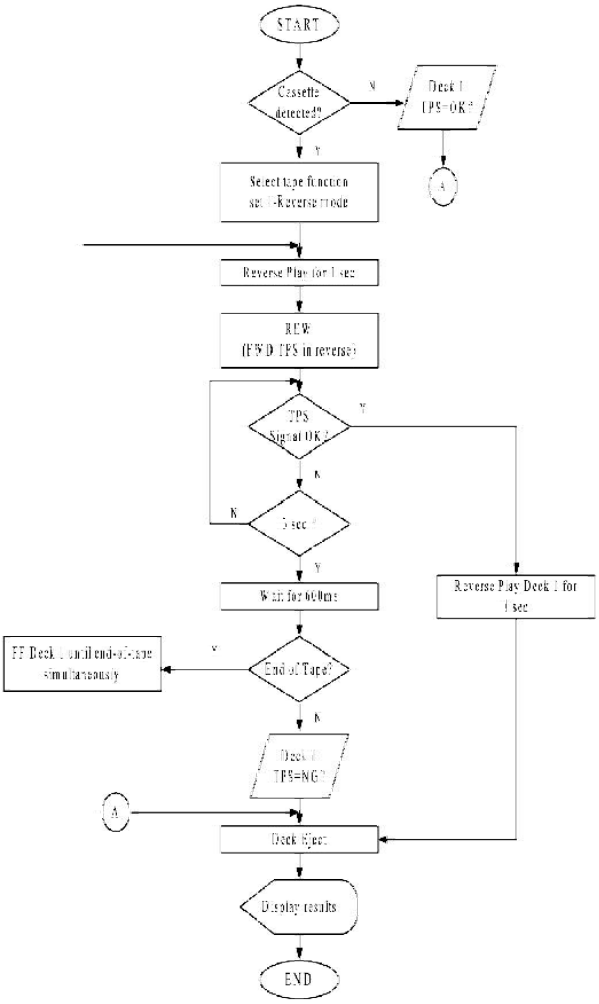


## 8.2. Error Code Table

**Self-Diagnosis Function provides information on any problems occuring for the unit and its respective components by displaying error codes. Thesed error code such as U**, H** and F** are stored in memory and held unless it is cleared.**
**The error code is automatically display after entering into self-diagnostic mode.**

| Error Code | Diagnosis Contents | Description of error | Automatic FL Display | Remarks |
|---|---|---|---|---|
| H01 | MODE SW abnormal | | | For deck mechanism unit.<br><br>Press [<br>on main unit for next error. |
| H02 | REC INH SW abnormal | | | For deck mechanism unit.<br><br>Press [<br>on main unit for next error. |
| H03 | HALF SW abnormal | | | For deck mechanism unit.<br><br>Press [<br>on main unit for next error. |
| F01<br><br>F02 | Reel pulse abnormal<br><br>TPS abnormal | | | For deck mechanism unit.<br><br>Press [<br>on main unit for next error. |
| F15 | CD REST SW Abnormal | CD traverse position intial setting operation failsafe counter (1000 ms) waiting for REST SW toturn on. Error No. shall be clear by force or during cold start. | | For CD unit (For Traverse).<br><br>Press [<br>on main unit for next error. |
| F26 | Communication between CD servo LSI and micro-p abnormal. | CD function DTMS command, after system setting, If SENSE = 'L' cannot be detected. Memory shall contain F26 code. After Power on, CD function shall continue, error display shall be "NO DISC". Error No. shall be clear by force or cold start. | | For CD unit (For Traverse).<br><br>Press [<br>on main unit for next error. |

| Error Code | Diagnosis Contents | Description of error | Automatic FL Display | Remarks |
|---|---|---|---|---|
| POWER AMP output abnormal | | During normal operation, if DCDET becomes "L", normal POWER OFF process shall not be executed, PCONT shall be switched to "L" immediately. "GOODBYE" shall not be display but the error display F61 is displayed instead. 2 seconds after the F61 displayed, ECONO shall be set to "L" and FL display shall be turned off. The error content shall be memorized when the abnormality occurs and can be display in the C-mecha self-diagnostic mode described later. | | For Power Supply Related Error Detection.<br><br>Press [<br>on main unit for next error. |

# 9. Assembling and Disassembling

## 9.1. Caution

**"ATTENTION SERVICER"**
**Some chassis components may be have sharp edges. Be careful when disassembling and servicing.**

1. **This section describes procedures for checking the operation of the major printed circuit boards and replacing the main components.**
2. **For reassembly after operation checks or replacement, reverse the respective procedures. / Special reassembly procedures are described only when required.**
3. **Select items from the following index when checks or replacement are required.**

**Warning:**

**This product uses a laser diode. Refer to "Precaution of Laser Diode".**

**Below is the list of disassembly sections**

- Disassembly of Side Panel L & R
- Disassembly of Top Cabinet Unit
- Disassembly of CD Mechanism
- Disassembly of CD Open/Close P.C.B.
- Disassembly of Front Panel
- Disassembly of Deck Mechanism
- Disassembly of Panel P.C.B.
- Disassembly of Tuner Extent P.C.B.
- Disassembly of Transformer P.C.B.
- Disassembly of Rear Panel
- Disassembly of Main/Power P.C.B.
- Replacement of CD Lid and CD Open Spring
- Replacement of CD Damper Gear
- Replacement of Cassette Lid and Cassette Open Spring
- Replacement of Cassette Damper Gear
- Replacement of Optical pickup unit (CD Mechanism)
- Replacement of a traverse gear A and a traverse gear B
- Procedure for Replacing Pinch Roller and Head Block (Deck Mechanism Unit)
- Procedure for Replacing Motor, Capstan Belt A, Capstan Belt B, and Winding Belt (Deck Mechanism Unit)
- Procedure for Replacing Parts on Deck Mechanism PCB
- Handling of cassette tape jam

## 9.2. Disassembly flow chart

**The following chart is the procedure for disassembling the casing and inside parts for internal inspection when carrying out the servicing.**
**To assemble the unit, reverse the steps shown in the chart below.**

## 9.3. Main Parts Location Diagram

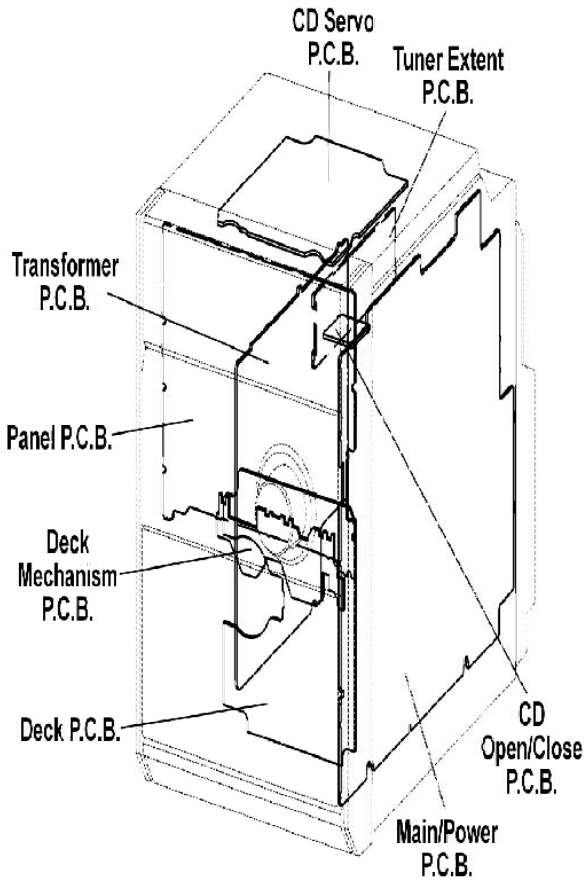


## 9.4. Disassembly of Side Panel L & R

### - Disassembly of Side Panel (R)

Side Panel (R)

**Step 1: Remove 5 screws.**

**Step 2: Remove the side panel (R) as arrow shown.**

### - Disassembly of Side Panel (L)

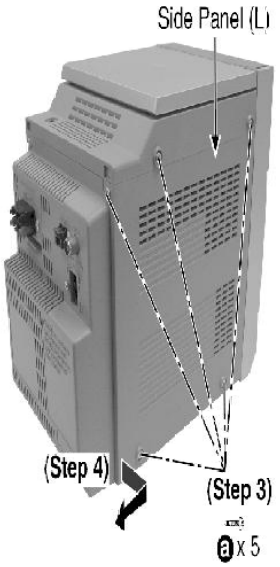


**Step 3: Remove 5 screws.**
**Step 4: Remove the side panel (L) as arrow shown.**

## 9.5. Disassembly of Top Cabinet Unit

**Step 1: Remove 3 screws.**

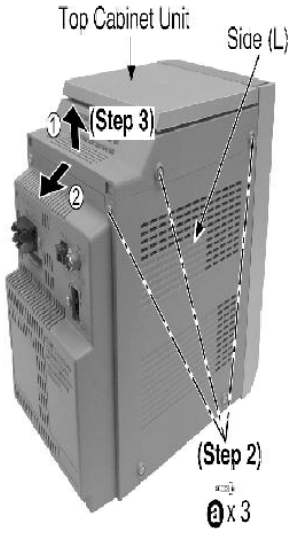


**Step 2: Remove 3 screws.**
**Step 3: Lift up the top cabinet unit, push backward as arrow shown and flip top cabinet unit sideway. (Be careful of the catch)**

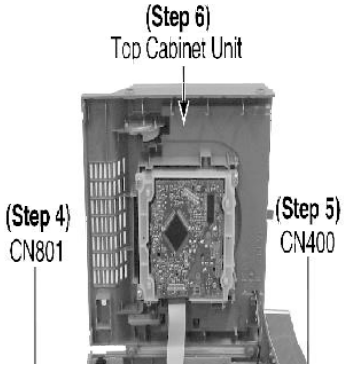


**Step 4: Disconnect FFC cable (CN801).**
**Step 5: Detach connector (CN400).**
**Step 6: Remove top cabinet unit.**

## 9.6. Disassembly of CD Mechanism

**- Follow the (Step 1) - (Step 6) of Item 9.5. - Disassembly of Top Cabinet Unit**

**Step 1: Remove 4 screws.**
**Step 2: Remove CD mechanism. (Refer to section 9.19 for disassembly of CD mechanism unit).**

## 9.7. Disassembly of CD Open/Close P.C.B.

**- Follow the (Step 1) - (Step 6) of Item 9.5. - Disassembly of Top Cabinet Unit**

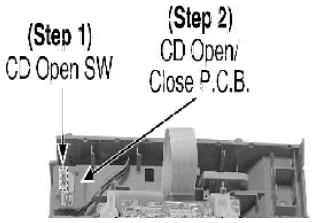


**Step 1: Unsolder the CD Open SW.**
**Step 2: Remove CD Open/Close P.C.B.**

## 9.8. Disassembly of Front Panel

**- Follow the (Step 1) - (Step 4) of Item 9.4. - Disassembly of Side Panel L & R**

**- Follow the (Step 3) - (Step 6) of Item 9.5. - Disassembly of Top Cabinet Unit**

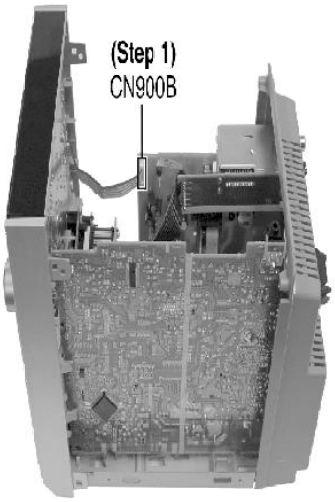


**Step 1: Detach connector (CN900B).**

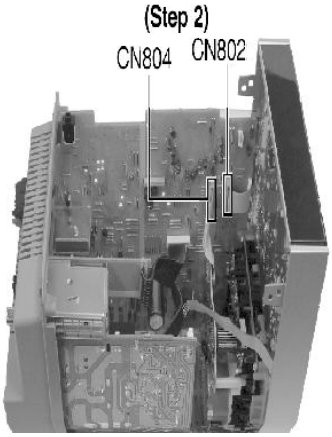


**Step 2: Disconnect FFC cable (CN802 and CN804).**

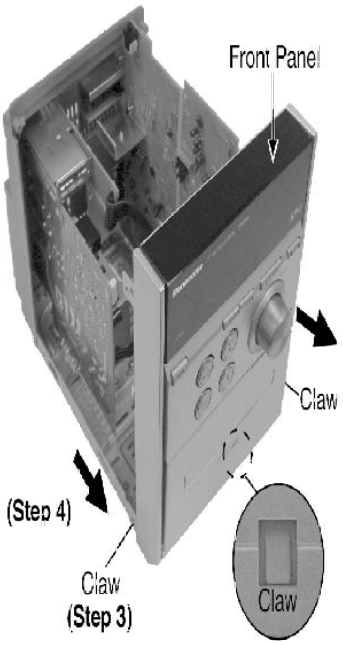


**Step 3: Release 3 claws.**
**Step 4: Remove the front panel as arrow shown.**

## 9.9. Disassembly of Deck Mechanism

- **Follow the (Step 1) - (Step 4) of Item 9.4. - Disassembly of Side Panel L & R**
- **Follow the (Step 3) - (Step 6) of Item 9.5. - Disassembly of Top Cabinet Unit**
- **Follow the (Step 1) - (Step 4) of Item 9.8. - Disassembly of Front Panel**

**Step 1: Push the lever as arrow shown to open the cassette lid.**

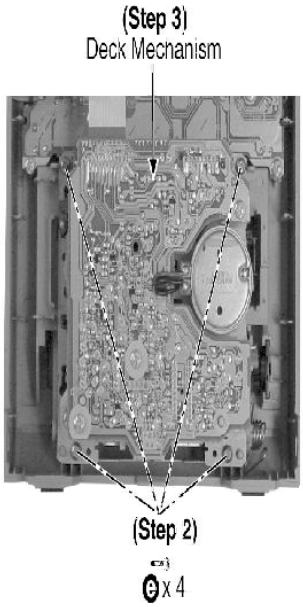


**Step 2: Remove 4 screws.**
**Step 3: Remove deck mechanism.**

## 9.10. Disassembly of Panel P.C.B.

- **Follow the (Step 1) - (Step 4) of Item 9.4. - Disassembly of Side Panel L & R**
- **Follow the (Step 3) - (Step 6) of Item 9.5. - Disassembly of Top Cabinet Unit**
- **Follow the (Step 1) - (Step 4) of Item 9.8. - Disassembly of Front Panel**

**Step 1: Remove the volume knob.**

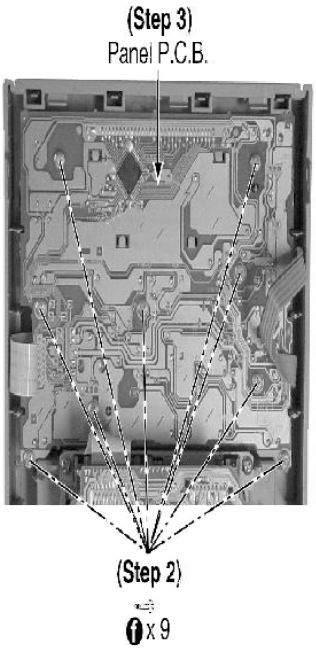


**Step 2: Remove 9 screws.**
**Step 3: Remove the Panel P.C.B.**

## 9.11. Disassembly of Tuner Extent P.C.B.

**- Follow the (Step 1) - (Step 6) of Item 9.5. - Disassembly of Top Cabinet Unit**

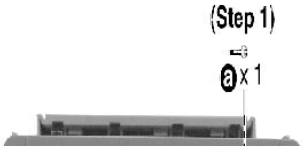


**Step 1: Remove 1 screw.**

**Step 2: Detach connector (CN401).**
**Step 3: Remove the Tuner Extent P.C.B.**

## 9.12. Disassembly of Transformer P.C.B.

**- Follow the (Step 1) - (Step 6) of Item 9.5. - Disassembly of Top Cabinet Unit**

**- Follow the (Step 1) of Item 9.11. - Disassembly of Tuner Extent P.C.B.**

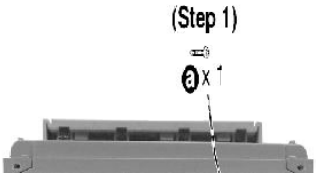


**Step 1: Remove 1 screw.**

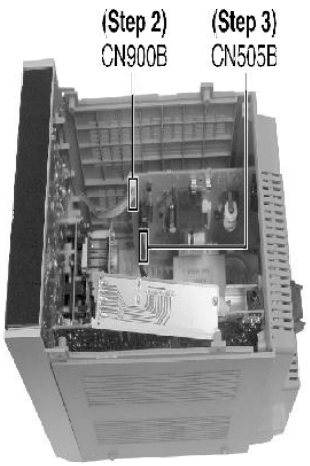


**Step 2: Detach connector (CN900B).**
**Step 3: Detach connector (CN505B).**

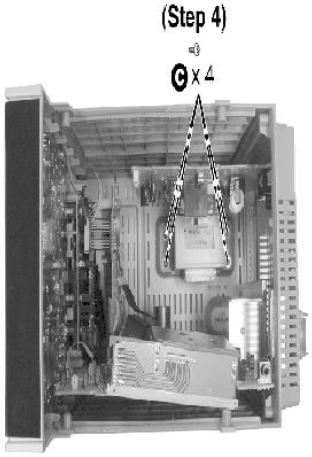


**Step 4: Remove 4 screws.**

**Step 5: Remove the Transformer P.C.B as arrow shown.**

## 9.13. Disassembly of Rear Panel

**- Follow the (Step 1) - (Step 4) of Item 9.4. - Disassembly of Side Panel L & R**

- Follow the (Step 3) - (Step 6) of Item 9.5. - Disassembly of Top Cabinet Unit

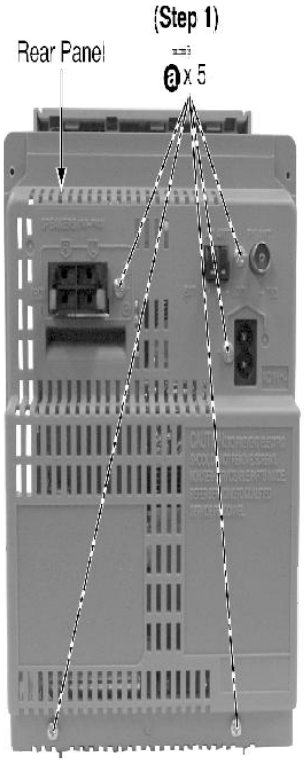


**Step 1: Remove 5 screws and remove the rear panel.**

## 9.14. Disassembly of Main/Power P.C.B.

- Follow the (Step 1) - (Step 4) of Item 9.4. - Disassembly of Side Panel L & R
- Follow the (Step 3) - (Step 6) of Item 9.5. - Disassembly of Top Cabinet Unit
- Follow the (Step 2) of Item 9.8. - Disassembly of Front Panel
- Follow the (Step 1) - (Step 3) of Item 9.11. - Disassembly of Tuner Extent P.C.B.
- Follow the (Step 3) of Item 9.12. - Disassembly of Transformer P.C.B.
- Follow the (Step 1) of Item 9.13. - Disassembly of Rear Panel

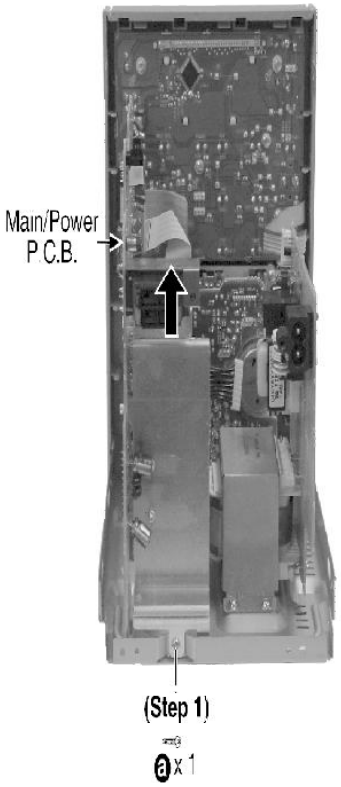


**Step 1: Remove 1 screw and remove the Main/Power P.C.B as arrow shown.**

## - Replacement of Power Amplifier IC

**Step 1: Remove 3 screws.**

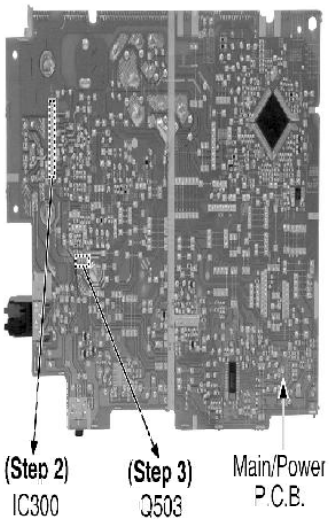


**Step 2: Unsolder the terminal of Power Amp IC (IC300) and replace the component.**
**Step 3: Unsolder the terminal of Transistor (Q503) and replace the component.**

## 9.15. Replacement of CD Lid and CD Open Spring

**- Follow the (Step 1) - (Step 6) of Item 9.5. - Disassembly of Top Cabinet Unit**

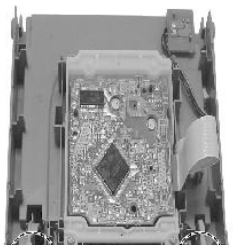

**Step 1: Pull both sides CD holders to the direction of the arrows shown.**

**Step 2: Press the CD lid as arrow shown to open.**

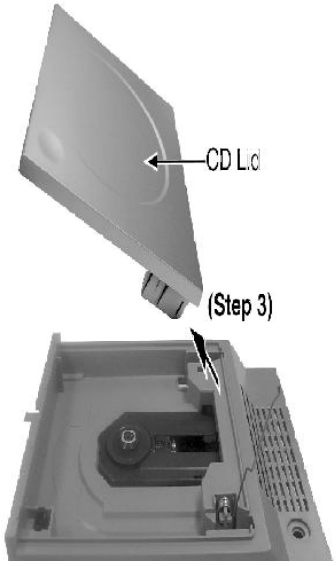


**Step 3: Remove the CD lid as arrow shown.**

**Step 4: Remove the CD open spring as arrow shown.**

## 9.16. Replacement of CD Damper Gear

- Follow the (Step 1) - (Step 6) of Item 9.5. - Disassembly of Top Cabinet Unit
- Follow the (Step 2) of Item 9.15. - Replacement of CD Lid and CD Open Spring

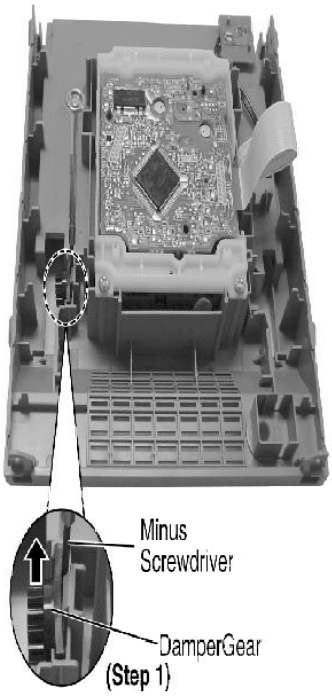


**Step 1: Use a minus screwdriver slot into the gap and push out the damper gear as arrow shown. (Be careful of the catches)**

## 9.17. Replacement of Cassette Lid and Cassette Open Spring

- Follow the (Step 1) - (Step 4) of Item 9.4. - Disassembly of Side Panel L & R
- Follow the (Step 3) - (Step 6) of Item 9.5. - Disassembly of Top Cabinet Unit
- Follow the (Step 1) - (Step 4) of Item 9.8. - Disassembly of Front Panel
- Follow the (Step 1) of Item 9.9. - Disassembly of Deck Mechanism

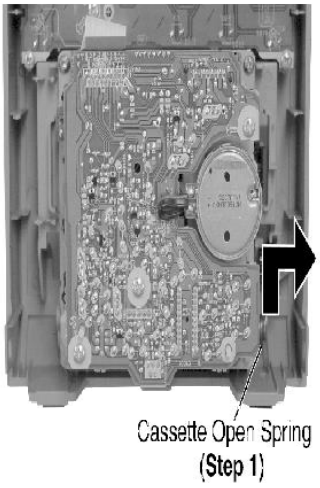


**Step 1: Remove the cassette open spring as arrow shown.**

**Step 2: Pull both sides cassette holders to the direction of the arrows shown.**

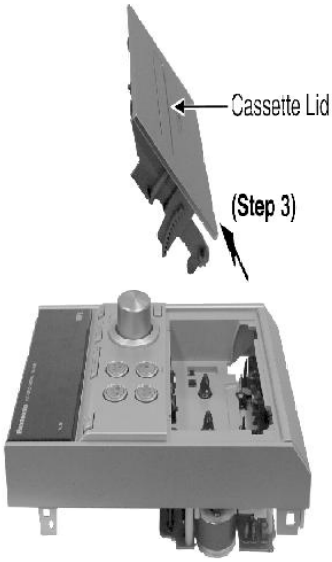


**Step 3: Remove the cassette lid as arrow shown.**

## 9.18. Replacement of Cassette Damper Gear

- **Follow the (Step 1) - (Step 4) of Item 9.4. - Disassembly of Side Panel L & R**
- **Follow the (Step 3) - (Step 6) of Item 9.5. - Disassembly of Top Cabinet Unit**
- **Follow the (Step 1) - (Step 4) of Item 9.8. - Disassembly of Front Panel**
- **Follow the (Step 1) of Item 9.9. - Disassembly of Deck Mechanism**

**Step 1: Use a minus screwdriver slot into the gap and push out the damper gear as arrow shown. (Be careful of the catches)**

## 9.19. Replacement of optical pickup unit (CD mechanism)

- **Follow the (Step 1) - (Step 6) of Item 9.5. - Disassembly of Top Cabinet Unit**

## - Follow the (Step 1) - (Step 2) of Item 9.6. - Disassembly of CD Mechanism

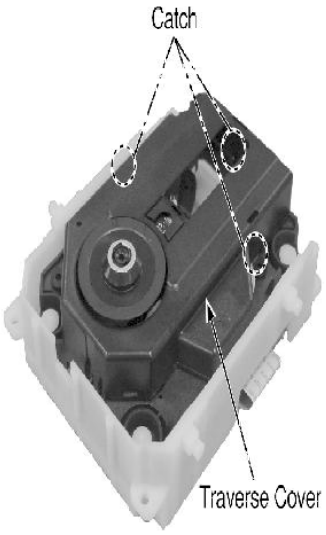


**Step 1: Remove 3 catches and remove the traverse cover.**

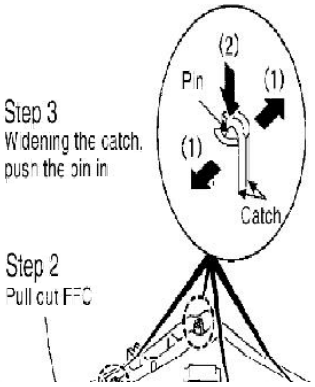

Step 4

Remove 4 pins

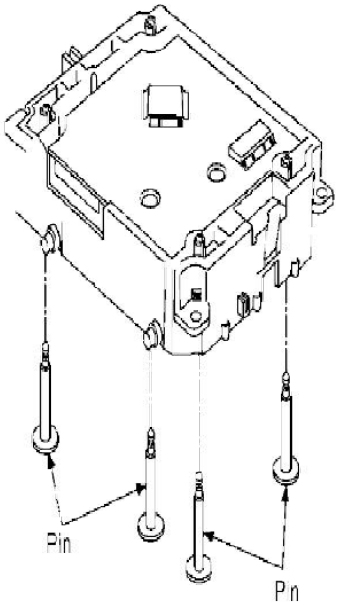


Step 5

Remove the traverse deck

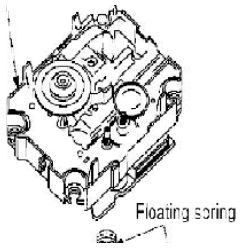

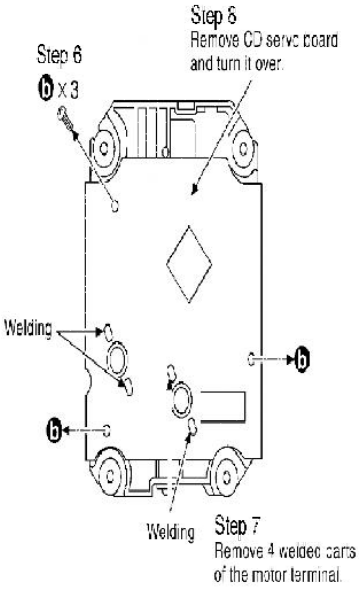
Step 8
Remove CD servo board and turn it over.
Step 6
b x 3
Welding
b
b
Welding
Step 7
Remove 4 welded parts of the motor terminal.

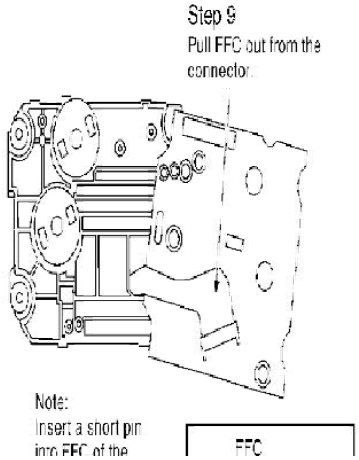
Step 9
Pull FFC out from the connector.
Note:
Insert a short pin
FFC

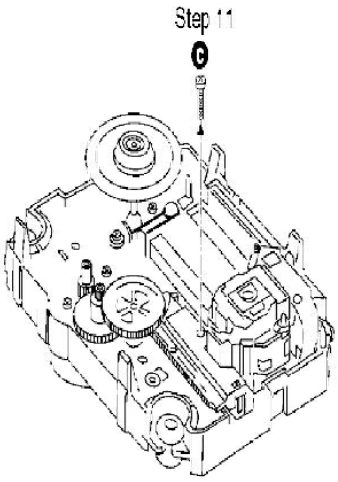
Step 11
C

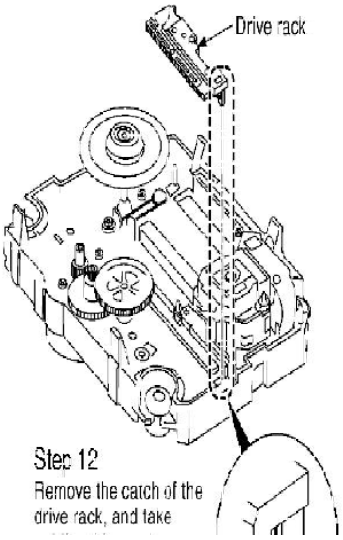
Drive rack
Step 12
Remove the catch of the
drive rack, and take

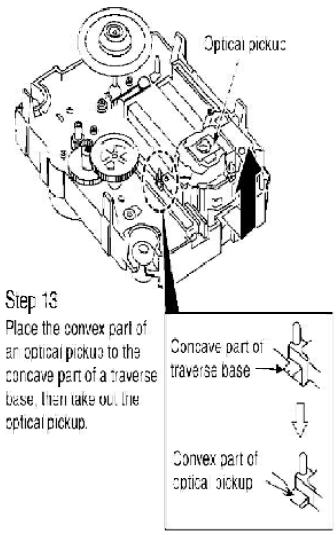


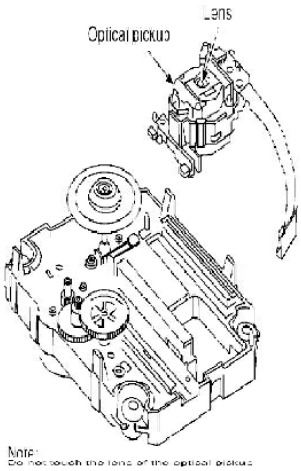


## 9.20. Replacement of a traverse gear A and a traverse gear B

- **Follow the (Step 1) - (Step 6) of Item 9.5. - Disassembly of Top Cabinet Unit**
- **Follow the (Step 1) - (Step 2) of Item 9.6. - Disassembly of CD Mechanism**
- **Follow the (Step 1) - (Step 5) of Item 9.19. - Replacement of optical pickup unit (CD mechanism)**

Step 1

Rotate the traverse gear (B) to the arrow direction, and shift the optical pickup to the furthest backward.

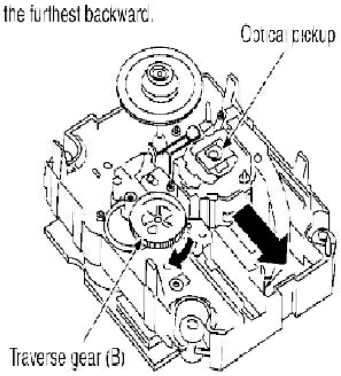


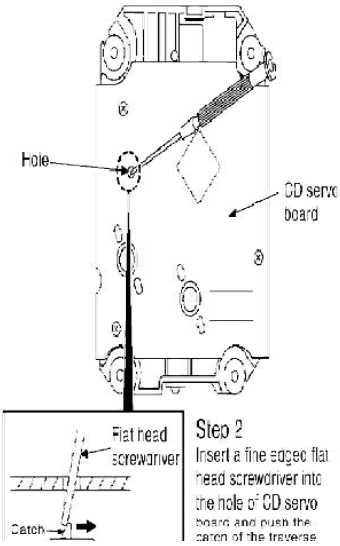


Step 2

Insert a fine edged flat head screwdriver into the hole of CD servo board and push the catch of the traverse

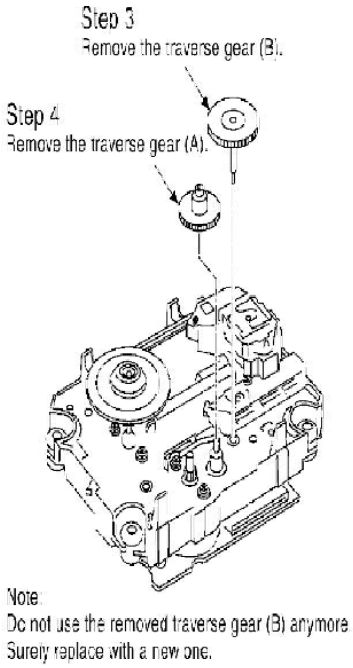


## 9.21. Procedure for Replacing Pinch Roller and Head Block (Deck Mechanism Unit)

- **Follow the (Step 1) - (Step 4) of Item 9.4. - Disassembly of Side Panel L & R**
- **Follow the (Step 3) - (Step 6) of Item 9.5. - Disassembly of Top Cabinet Unit**
- **Follow the (Step 1) - (Step 4) of Item 9.8. - Disassembly of Front Panel**
- **Follow the (Step 1) - (Step 3) of Item 9.9. - Disassembly of Deck Mechanism**

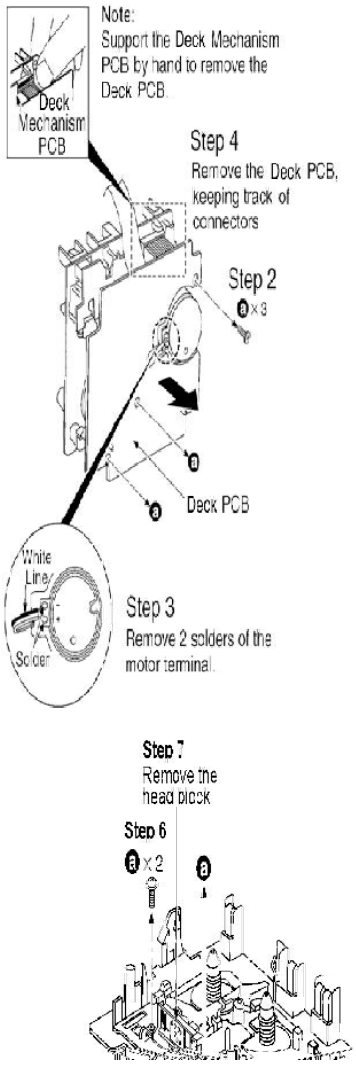


## 9.22. Procedure for Replacing Motor, Capstan Belt A, Capstan Belt B, and Winding Belt (Deck Mechanism Unit)

- **Follow the (Step 1) - (Step 4) of Item 9.4. - Disassembly of Side Panel L & R**
- **Follow the (Step 3) - (Step 6) of Item 9.5. - Disassembly of Top Cabinet Unit**
- **Follow the (Step 1) - (Step 4) of Item 9.8. - Disassembly of Front Panel**
- **Follow the (Step 1) - (Step 3) of Item 9.9. - Disassembly of Deck**

**Mechanism**

**- Follow the (Step 1) - (Step 4) of Item 9.21. - Procedure for Replacing Pinch Roller and Head Block (Deck Mechanism Unit)**

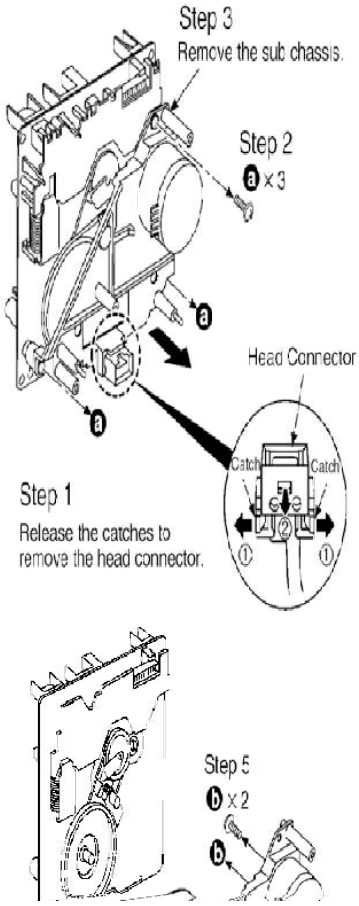

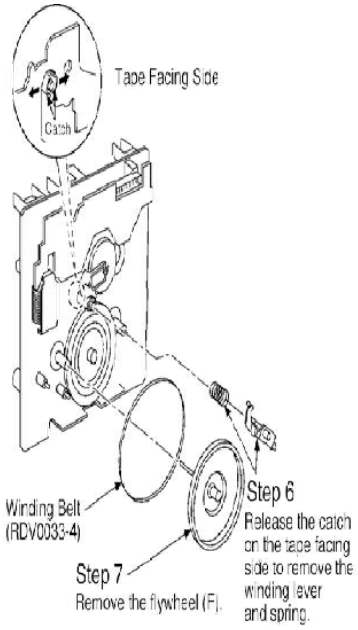
Tape Facing Side
Catch
Winding Belt
(RDV0033-4)
Step 6
Release the catch on the tape facing side to remove the winding lever and spring.
Step 7
Remove the flywheel (F).

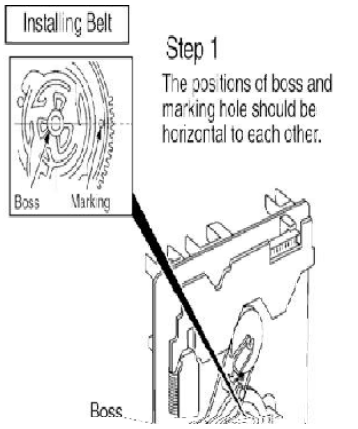
Installing Belt
Step 1
The positions of boss and marking hole should be horizontal to each other.
Boss
Marking
Boss

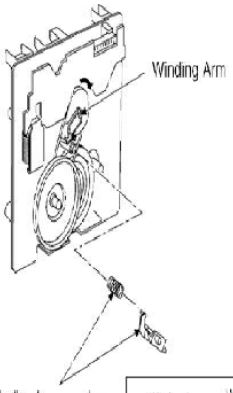


Step 5

Install the winding lever and spring while the winding arm is pressed to the arrow direction. (Be sure that the winding lever is firmly inserted and the catch is hooked.)

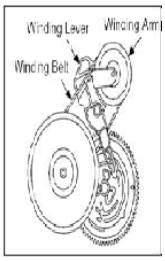


Note:
The winding lever should be positioned as shown in the right figure.

Step 6

Install the capstan belt temporarily as shown in the figure below.

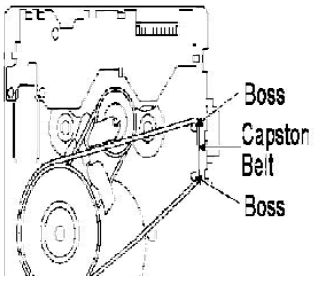

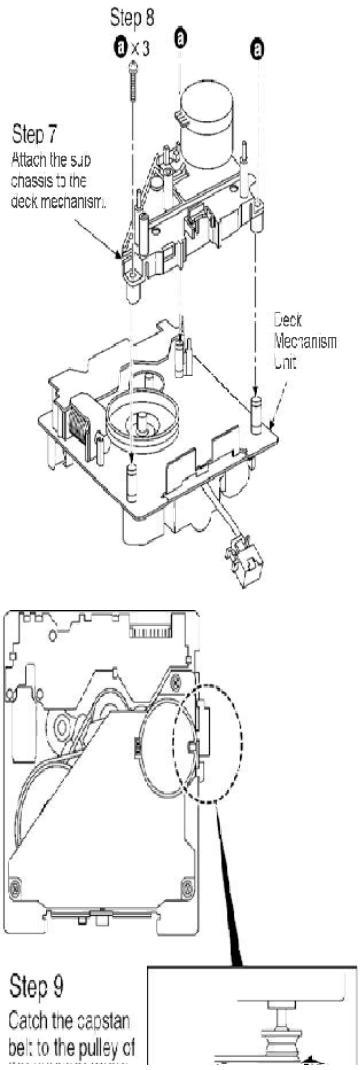


## 9.23. Procedure for Replacing Parts on Deck Mechanism PCB

- **Follow the (Step 1) - (Step 4) of Item 9.4. - Disassembly of Side Panel L & R**
- **Follow the (Step 3) - (Step 6) of Item 9.5. - Disassembly of Top Cabinet Unit**
- **Follow the (Step 1) - (Step 4) of Item 9.8. - Disassembly of Front Panel**
- **Follow the (Step 1) - (Step 3) of Item 9.9. - Disassembly of Deck Mechanism**

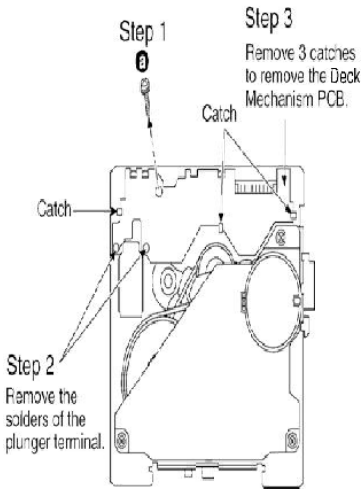


## 9.24. Handling of cassette tape jam

**- Follow the (Step 3) - (Step 4) of Item 9.4. - Disassembly of Side Panel L & R**

**Step 1**
If the cassette tape is not ejected due to twining around capstan or pinch roller during playing or recording, rotate a Winding Arm to the arrow direction to remove twined tape.

**Step 2**
Push the lever to the arrow direction, open the cassette cover and take out the cassette tape.

# 10. Service Fixture and Tools

| Service Tools | |
|---|---|
| **Extension FFC** | |
| **(A) Deck P.C.B. - Main/Power P.C.B.** | **RFKZPM23PS (19 Pins)** |

# 11. Service Positions

**Note: For description of the disassembly procedures, see the Section 9**

## 11.1. Checking and Repairing of Main/Power P.C.B.

**1. Remove Side Panel (R)**

Remove 5 screws.

Remove the side panel (R).

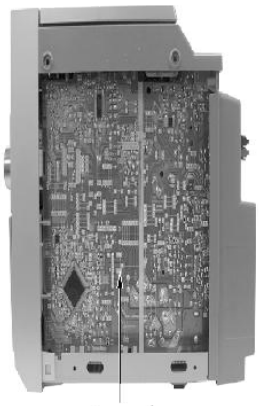


## 11.2. Checking and Repairing of Transformer P.C.B.

**1. Remove Side Panel (L)**

Remove 5 screws.

Remove the side panel (L).

## 11.3. Checking and Repairing of CD Servo & CD Open/Close P.C.B.

**1. Disassemble Top Cabinet Unit**

Remove 3 screws on R side.

Remove 3 screws on L side.

Flip top cabinet unit sideway

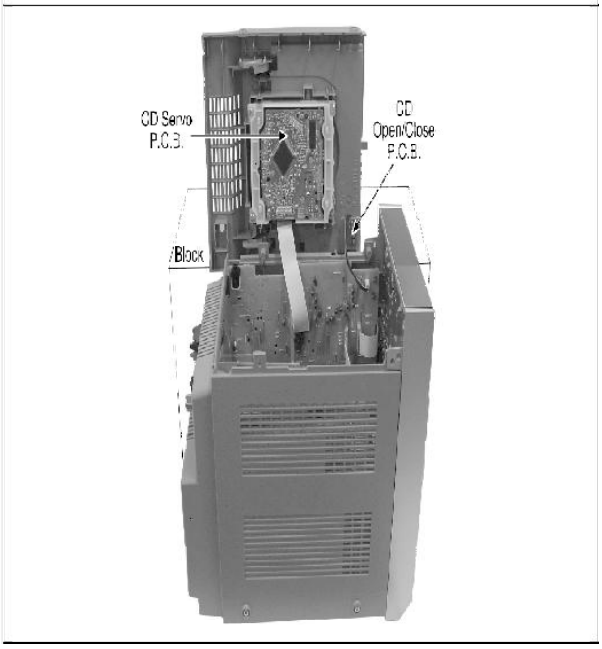


## 11.4. Checking and Repairing of Panel P.C.B.

**1. Disassemble Top Cabinet Unit**

Remove 3 screws on R side.

Remove 3 screws on L side.

Flip top cabinet unit sideway

## 11.5. Checking and Repairing of Tuner Extent P.C.B.

**1. Disassemble Top Cabinet Unit**

Remove 3 screws on R side.

Remove 3 screws on L side.

Flip top cabinet unit sideway

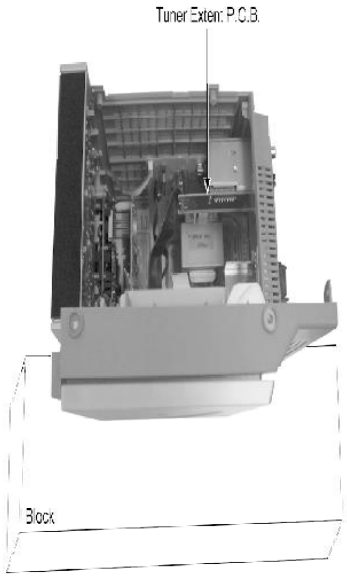


## 11.6. Checking and Repairing of Deck & Deck Mechanism P.C.B.

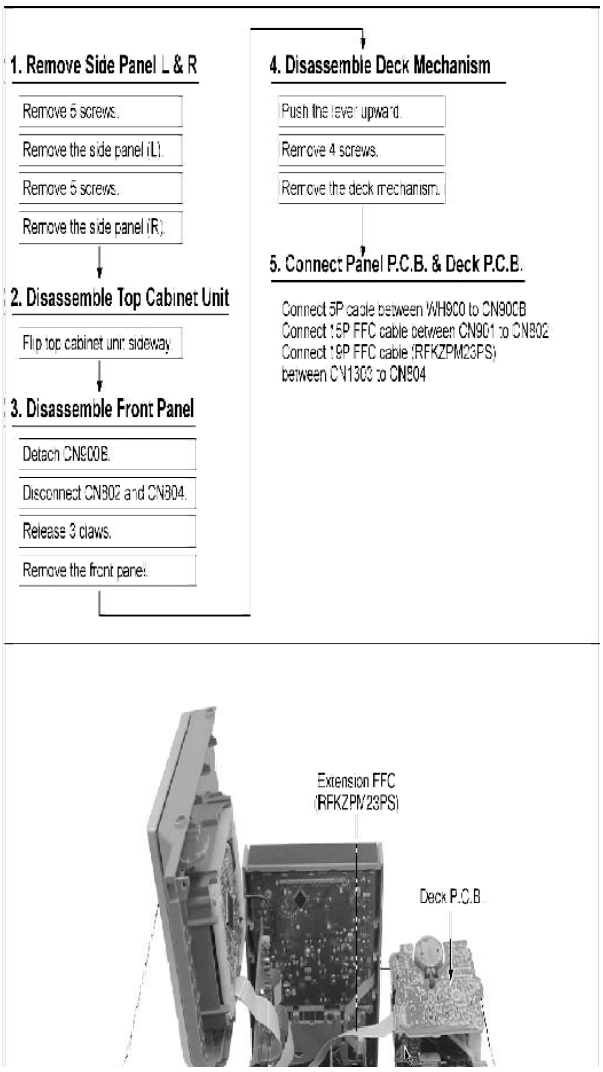


# 12. Procedure for Checking Operation of Individual Parts of Deck Mechanism Unit

## 12.1. Operation Check with Cassette Tape

**1. Pull up the EJECT lever using a rubber band. (Fig. 6)**

**2. Supply DC5V to MOTOR. (  MOTOR rotates.) (Fig. 5)**

**3. Insert a cassette tape to the unit.**

4. Supply DC9V to the plunger, and turn the power ON and OFF. ( Power +PL, -PL) (Fig. 5)
   A. FWD PLAY: Supply the plunger power in a flash. (ON: approx. 5msec)
   B. FWD FF: Supply the plunger power in a flash at PLAY mode. (ON: approx. 5msec)
   C. STOP: Supply the plunger power in a flash at FWD FF mode. (ON: approx. 5msec)
   D. REV PLAY: Supply the plunger power in a normal timing at STOP mode. (ON: approx. 200msec)
   E. REV REW: Supply the plunger power in a flash at REV PLAY mode. (ON: approx. 50msec)
   F. STOP: Supply the plunger power in a flash at FF mode. (ON: approx. 50msec)
   Repeat the operation ( → FWD PLAY)
   (Note) Other operation may start if a timing of supplying the plunger power is missed.

### 12.1.1. Connection Status between Mechanism and Power Supply (Motor, Plunger)

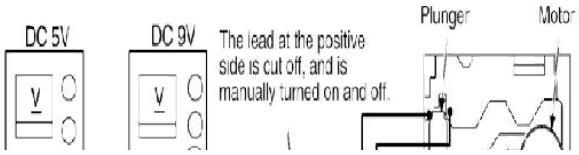


### 12.1.2. Operative Parts of Deck Mechanism Unit (EJECT lever fitted with rubber band, / Plunger/Rib operation)

Fig. 6

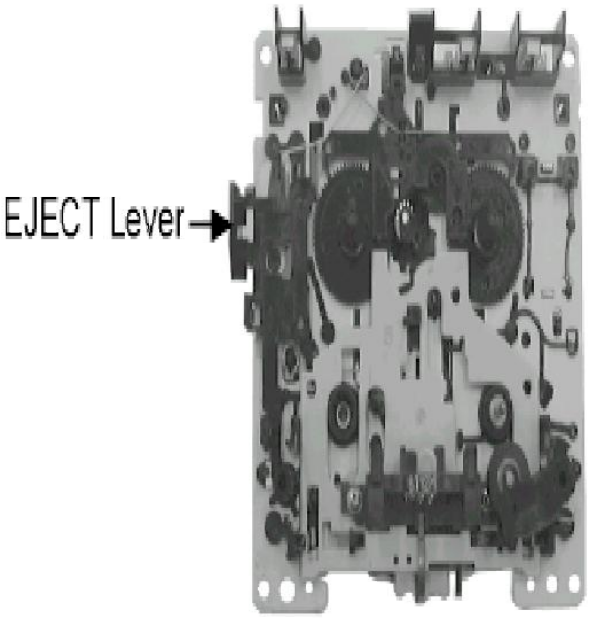


## 12.2. Operation Check without Cassette Tape

1. Pull up the EJECT lever using a rubber band. (Fig. 6)
2. Supply DC5V to MOTOR. ( → MOTOR rotates.)
3. Lift up the mechanism unit's plunger/rib with the tip of a negative screwdriver, and operate the unit in the same timing as / supplying the power. (Fig. 7) /

Fig. 7

# 13. Measurement And Adjustments

## 13.1. Cassette Deck Section

### 13.1.1. Requirements

- Test tape (QZZCFM) (QZZCWAT)

- Normal blank cassette tape (QZZCRA)
- Digital frequency counter
- Oscilloscope
- Electrical voltmeter
- Headphone jack output jig (Fig. 8)

### 13.1.2. Setting of Unit

- VOLUME: MAX

### 13.1.3. Preparations

1. Apply under [9. Assembling and Disassembling].
2. Remove 4 screws from the mechanism unit to disassemble. under [9. Assembling and Disassembling].
3. Connect the headphone jack output jig (Fig. 8) to headphone jack.

Fig. 8

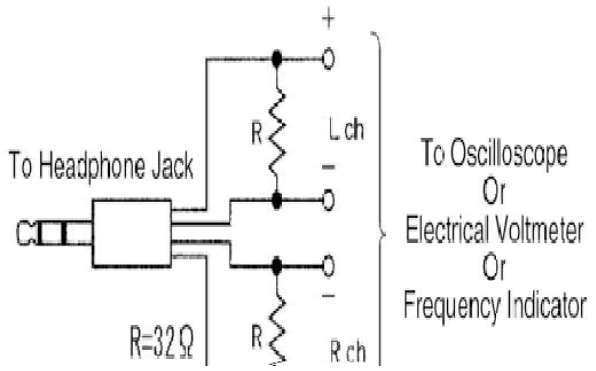


Fig. 9

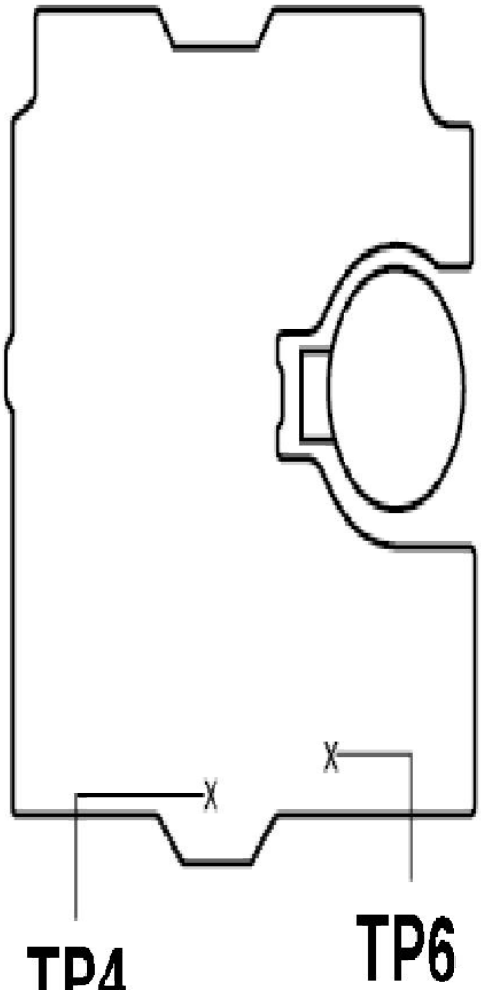


### 13.1.4. Tape Speed Adjustment

**- Normal speed adjustment (only during forward playback)**
**(Product reference value: 3,000±90Hz)**

**1. Connect a frequency indicator. (Fig. 12)**

**2. Playback the middle portion of the test tape (QZZCWAT).**

**3. Adjust the motor screw so that the following output level is produced. (Fig. 10)**
**Adjustment Range: 3,000 ± 90Hz (a constant speed)**

**Fig. 10**

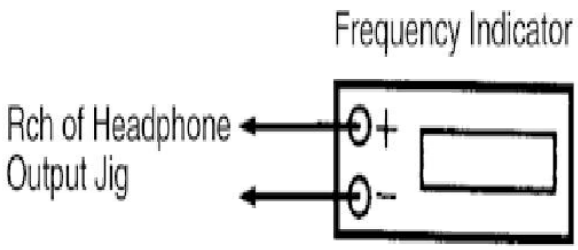


Fig. 11

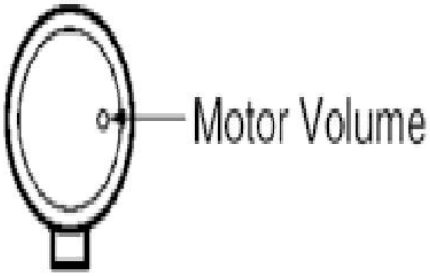


### 13.1.5. Bias Voltage Check

1. Connect an electrical voltmeter. (Fig. 9) (Fig. 12)
2. Set the function to "TAPE" position.
3. Insert a normal blank cassette tape (QZZCRA).
4. While pressing and holding down [REC ( / )] button, press [TAPE ( )] button to pause the recording mode. (Repeat pressing the buttons till the recording pause mode is activated.)
5. Check that the output level is within the standard range.
   Standard Range: 16 ± 3mV

Fig. 12

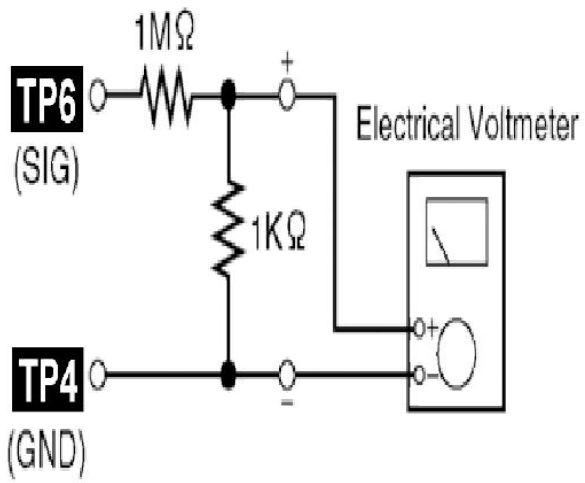


### 13.1.6. Bias Frequency Check

1. **Connect a digital frequency counter (Fig. 13).**
2. **Set the function to "TAPE" position.**
3. **Insert a normal blank cassette tape (QZZCRA) and press "REC" mode on main unit.**
4. **Check that the output frequency is within the standard range.**

| |
|---|
| **Standard Value: 98 ±8 kHz** |

**Fig. 13**

# 14. Voltage Measurement and Waveform Chart

Note:

- Indicated voltage values are the standard values for the unit measured by the DC electronic circuit tester (high-impedance) with the chassis taken as standard.
  Therefore, there may exist some errors in the voltage values, depending on the internal impedance of the DC circuit tester.
- Circuit voltage and waveform described herein shall be regarded as reference information when probing defect point because it may differ from actual measuring value due to difference of Measuring instrument and its measuring condition and product itself.

### 14.1. Voltage Measurement

#### 14.1.1. CD Servo P.C.B.

#### 14.1.2. Main/Power P.C.B.

#### 14.1.3. Panel P.C.B.

#### 14.1.4. Transformer P.C.B.

#### 14.1.5. Deck P.C.B.

#### 14.1.6. Deck Mechanism P.C.B.

### 14.2. Waveform

## 15. Wiring Connection Diagram

## 16. Block Diagram

## 17. Notes of Schematic Diagram

(All schematic diagrams may be modified at any time with the development of new technology)

Note :

**S900**

Stop/-Demo switch

**S901**

CD switch

**S902**

Tape switch

**S903**

Tuner/Band switch

**S904**

**FF switch**

**S905**
**REW switch**

**S906**
**Power switch**

**S907**
**Tape_Eject switch**

**S908**
**Bass/Treble switch**

**S909**
**Rec switch**

**S971**
**Mode switch**

**S972**
**Half switch**

**S973**
**CR02 switch**

**S975**
**Recinh_F switch**

**S1000**
**CD Open/Close switch**

**S7201**
**Reset switch**

**VR900**
**VR Volume Jog**

- **The voltage value and waveforms are the reference voltage of this unit measured by DC electronic voltmeter (high impedance) and oscilloscope on the basis of chassis. Accordingly, there may arise some error in voltage values and waveforms depending upon the internal impedance of the tester or the measuring unit.**
- **Importance safety notice :**
  **Components identified by mark have special characteristics important for safety. Furthermore, special parts which have purposes of fire-retardant (resistors), high-quality sound (capacitors), low-noise (resistors), etc. are used. When replacing any of components, be sure**

to use only manufacturer's specified parts shown in the parts list.

**Caution !**

**IC, LSI and VLSI are sensitive to static electricity.**
**Secondary trouble can be prevented by taking care during repair.**

- Cover the parts boxes made of plastics with aluminium foil.
- Put a conductive mat on the work table.
- Ground the soldering iron.
- Do not touch the pins of IC, LSI or VLSI with fingers directly.

# 18. Schematic Diagram

## 18.1. CD Servo Circuit

## 18.2. Main/Power Circuit, Tuner Extent Circuit and CD Open/Close Circuit

## 18.3. Panel Circuit and Transformer Circuit

## 18.4. Deck Circuit and Deck Mechanism Circuit

# 19. Printed Circuit Board

## 19.1. CD Servo P.C.B.

## 19.2. Main/Power P.C.B.

## 19.3. Tuner Extent P.C.B, CD Open/Close P.C.B and Panel P.C.B.

## 19.4. Deck P.C.B and Deck Mechanism P.C.B.

## 19.5. Transformer P.C.B.

# 20. Illustration of IC’s, Transistors and Diodes

# 21. Terminal Function of IC's

## 21.1. IC7001 (MN6627954MA) IC SERVO PROCESSOR/DIGITAL SIGNAL PROCESSOR/DIGITAL FILTER D/A CONVERTER

| Pin No. | Mark | I/O | Function |
|---|---|---|---|
| 1 | A11 | O | DRAM address signal O/P 11 |
| 2 | A9 | O | DRAM address signal O/P 9 |
| 3 | A8 | O | DRAM address signal O/P 8 |
| 4 | A7 | O | DRAM address signal O/P 7 |
| 5 | A6 | O | DRAM address signal O/P 6 |
| 6 | A5 | O | DRAM address signal O/P 5 |
| 7 | A4 | O | DRAM address signal O/P 4 |
| 8 | NWE | O | Write Enable Signal (DRAM) |
| 9 | NCAS | O | DRAM CAS Control Signal |
| 10 | NRAS | O | DRAM ARS Control Signal |
| 11 | A3 | O | DRAM address Signal O/P 3 |
| 12 | A2 | O | DRAM address Signal O/P 2 |
| 13 | A1 | O | DRAM address Signal O/P 1 |
| 14 | A0 | O | DRAM address Signal O/P 0 |
| 15 | A10 | O | DRAM address Signal O/P 10 |
| 16 | BA0 | N.C. | Motor O/P (0);/Serial I/P |
| 17 | BA1 | N.C. | Motor O/P (1);/Serial I/P |
| 18 | PRAMVSS33 | - | GND (DRAM) |
| 19 | PRAMVDD15 | - | Power Supply Voltage (DRAM) |
| 20 | PRAMVDD33 | - | Power Supply Voltage (+1.6V) |
| 21 | SPOUT | O | Spindle Drive O/P |
| 22 | PC | I/O | Spindle motor drive O/P signal serial data/ Monitoring I/P |
| 23 | TRVP | O | Traverse Drive O/P (+ve) |
| 24 | TRP | O | Tracking Drive O/P (+ve) |
| 25 | FOP | O | Focusing Drive O/P (+ve) |
| 26 | DVSS1 | I | GND |

| Pin No. | Mark | I/O | Function |
|---|---|---|---|
| 27 | IOVDD2 | I | Digital Power Supply Voltage 2 (I/O) |
| 28 | DVDD1 | - | Digital Power Supply Voltage 1 (Built-In) |
| 29 | SRVMON0 | N.C. | Servo Monitor (0) O/P |
| 30 | SRVMON1 | N.C. | Servo Monitor (1) O/P |
| 31 | AVSS2 | - | GND |
| 32 | OSCIN | I | Oscillating Input |
| 33 | CTRCRS | N.C. | Tracking Cross Comparator |
| 34 | VREF | - | +Vref Supply Voltage |
| 35 | E | I | Tracking Input Signal 1 |
| 36 | F | I | Tracking Input Signal 2 |
| 37 | D | I | Focusing Input Signal 4 |
| 38 | B | I | Focusing Input Signal 2 |
| 39 | C | I | Focusing Input Signal 3 |
| 40 | A | I | Focusing Input Signal 1 |
| 41 | PD | I | APC Amp I/P |
| 42 | LD | O | Laser Drive Current O/P |
| 43 | CENV | I | Detection Capacitance Connection terminal |
| 44 | RFENV | O | RF Envelope O/P |
| 45 | RFOUT | O | RF Summing Amp O/P |
| 46 | RFIN | I | SGC I/P |
| 47 | AVDD2 | I | Analog Power Supply voltage 2 (For DSL/PLL) |
| 48 | ARFDC | O | AGC Capacitive Connection Terminal |
| 49 | ARFOUT | O | AGC Output |
| 50 | ARFFB | I | ARF Feedback Signal I/P |
| 51 | ARFIN | I | Audio RF Signal I/P |
| 52 | DSLF | I | Loop Filter Terminal (For DSL) |
| 53 | IREF | I | Reference I/P |
| 54 | PLLF | I | PLL Loop Filter Terminal (Phase Compare) |
| 55 | PLLF0 | O | PLL Loop Filter Terminal (Speed Compare) |
| 56 | OUTL\ | O | Audio O/P (LCH) |
| 57 | AVSS1 | I | GND |
| 58 | AVDD1 | I | Analog Power Supply Voltage 1 |
| 59 | OUTR | O | Audio O/P (RCH) |
| 60 | DVSS3 | I | GND3 (Digital Circuit) |

| Pin No. | Mark | I/O | Function |
|---|---|---|---|
| 61 | NSRVMONON | I | Servo Motor O/P Enabling |
| 62 | EXT0 | N.C. | Expansion O/P Port 0 |
| 63 | EXT1 | N.C. | Expansion O/P Port 1 |
| 64 | EXT2 | N.C. | Expansion O/P Port 2 |
| 65 | FLAG | N.C. | Flag Signal O/P |
| 66 | TX | N.C. | Digital Audio Interface O/P signal |
| 67 | MCLK | I | Micro-Computer Command Clock I/P |
| 68 | MDATA | I | Micro-Computer Data I/P |
| 69 | MLD | I | Micro-Computer Load I/P |
| 70 | STAT | O | Status Signal O/P |
| 71 | BLKCK | O | Subcode Blk Clock |
| 72 | NRST | O | LSI Reset Signal |
| 73 | DQSYTXT | N.C. | Pack Signal O/P for CD-Text data |
| 74 | SMCK | N.C. | Micro-Computer Clock O/P |
| 75 | PMCK | N.C. | IOCNT Serial data O/P (Synchronous O/P) |
| 76 | DVDD2 | - | Digital Power Supply Voltage 2 (+1.5V) |
| 77 | IOVDD1 | - | Digital Power Supply Voltage 1 (For I/O) |
| 78 | DVSS2 | - | GND2 (For Digital Circuit) |
| 79 | NTEST2 | I | Test Mode Setting (ON: H) |
| 80 | X2 | O | Crystal Oscillating Circuit O/P |
| 81 | X1 | I | Crystal Oscillating Circuit I/P |
| 82 | NTEST | I | Test Mode Setting I/P (ON:H) |
| 83 | D2 | I/O | Data Sigmal O/P 2 |
| 84 | D1 | I/O | Data Signal O/P 1 |
| 85 | D0 | I/O | Data Signal O/P 0 |
| 86 | D3 | I/O | Data Signal O/P 3 |
| 87 | D4 | I/O | Data Signal O/P 4 |
| 88 | D5 | I/O | Data Signal O/P 5 |
| 89 | D6 | I/O | Data Signal O/P 6 |
| 90 | D7 | I/O | Data Signal O/P 7 |
| 91 | D15 | I/O | Data Signal O/P 15 |
| 92 | D14 | I/O | Data Signal O/P 14 |

| Pin No. | Mark | I/O | Function |
|---|---|---|---|
| 93 | DRVDD | I | I/O Power Supply Voltage (DRAM) |
| 94 | D13 | I/O | Data Signal O/P 13 |
| 95 | D12 | I/O | Data Signal O/P 12 |
| 96 | D11 | I/O | Data Signal O/P 11 |
| 97 | D10 | I/O | Data Signal O/P 10 |
| 98 | D9 | I/O | Data Signal O/P 9 |
| 99 | D8 | I/O | Data Signal O/P 8 |
| 100 | SDRCK | O | Clock Signal O/P |

## 21.2. IC7002 (BA5948FPE2) IC 4CH Drive

| Pin No. | Mark | I/O | Function |
|---|---|---|---|
| 1 | IN2 | I | Motor Driver 92 Input |
| 2 | PC2 | I | Turntable Motor Drive Signal (“L”:ON) |
| 3 | IN1 | I | Motor Drive (1) Input |
| 4 | PC1 | - | Traverse Motor Drive Signal (“L”): ON) |
| 5-8 | N.C. | - | No Connection |
| 9 | PGND1 | - | Ground Connection (1) for Drive |
| 10 | PVCC1 | I | Power Supply (1) for Drive |
| 11 | D1- | O | Motor Drive (1) reverse - action output |
| 12 | D1+ | O | Motor Drive (1) forward - action output |
| 13 | D2- | O | Motor Drive (2) reverse - action output |
| 14 | D2+ | O | Motor Drive (2) forward - action output |
| 15 | D3- | O | Motor Drive (3) reverse - action output |
| 16 | D3+ | O | Motor Drive (3) forward - action output |
| 17 | D4- | O | Motor Drive (4) reverse - action output |
| 18 | D4+ | O | Motor Drive (4) forward - action output |
| 19 | PVCC2 | - | Power Supply (2) for Driver |

| Pin No. | Mark | I/O | Function |
|---|---|---|---|
| 20 | PGND2 | - | Ground Connection (2) for Driver |
| 21-24 | N.C. | O | No Connection |
| 25 | VCC | I | Power Supply terminal |
| 26 | VREF | I | Reference Voltage Input |
| 27 | IN4 | I | Motor Driver (4) Input |
| 28 | IN3 | I | Motor Driver (3) Input |

## 21.3. IC803 (MN101C49GHD1) MICROPROCESSOR

| Pin No. | Mark | I/O | Function |
|---|---|---|---|
| 1 | VREF- | - | A/D Converter Reference GND |
| 2 | KEY 1 | I | Key 1 Input |
| 3 | KEY 2 | I | Key 2 Input |
| 4 | AN6 (MK_IN1) | I | Mech Condition Input1 (Mode and TPS) |
| 5 | AN7 (MK_IN2) | I | Mech Condition Input2 (Half and RECINF) |
| 6 | PWRDET | I | Power Detect |
| 7 | REGION | I | Destination Setting |
| 8 | VOL_DET1 | I | Volume Lever Left |
| 9 | VOL_DET2 | I | Volume Lever Right |
| 10 | VREF + | - | A/D Converter Reference Volt |
| 11 | VDD | - | Power Input Pin |
| 12 | OSC2 (8MHZ) | O | Main Oscillator Output |
| 13 | OSC1 (8MHZ) | I | Main Oscillator Input |
| 14 | VSS | - | GND |
| 15 | XI (32KHZ) | I | Suboscillator Input |
| 16 | XO (32KHZ) | O | Suboscillator Output |
| 17 | MDE (GND) | - | No Connection |
| 18 | N.C. | - | No Connection |
| 19 | RDS_DATA | I/O | RDS IC CTRL |
| 20 | RDS_CLK | O | RDS CLK IN |
| 21 | CD_MDATA | O | CD LSI Command Data |
| 22 | CD_STAT | I | CD Status Input |
| 23 | CD_MCLK | O | CD LSI Command Clock |
| 24 | N.C. | - | No Connection |
| 25 | PCONT_1 | O | Power Control Output1 (PWR SPLY, Active High) |
| 26 | RMT | I | Remocon Input |

| Pin No. | Mark | I/O | Function |
|---|---|---|---|
| 27 | HALT | I | AC Failure Detect Signal |
| 28 | CD_OPEN / _SW | I | CD Open Switch (L: Open, H: Close) |
| 29 | RESTSW | I | CD Tranverse Limit SW |
| 30 | BLKCK | I | CD Subcode Block Clock Input |
| 31 | N.C. | - | No Connection |
| 32 | N.C. | - | No Connection |
| 33 | NRST | I | Micom Reset (L: Reset) |
| 34 | N.C. | - | No Connection |
| 35 | CD RST | O | CD Reset Output |
| 36 | CD_MLD | O | CD LSI Command Load |
| 37 | N.C. | - | No Connection |
| 38 | N.C. | - | No Connection |
| 39 | N.C. | - | No Connection |
| 40 | FL_CS | O | FL Strobe Output |
| 41 | N.C. | - | No Connection |
| 42 | FL_DATA | O | FL Data Output |
| 43 | N.C. | - | No Connection |
| 44 | FL_CLK | O | FL Clock Output |
| 45 | SDA | I/O | IIC Data Line For Tuner |
| 46 | N.C. | - | No Connection |
| 47 | CL | O | IIC Clock Signal For Tuner |
| 48 | N.C. | - | No Connection |
| 49 | PCONT_2 | O | Power Control Output2 (PWR AMP, active H) |
| 50 | DEMO | I | Demo Mode Setting (H: OFF, L: ON) |
| 51 | N.C. | - | No Connection |
| 52 | HP_SW | - | No Connection |
| 53 | MUTE A | O | Audio Mute O/P (L: Mute On) |
| 54 | N.C. | - | No Connection |
| 55 | N.C. | - | No Connection |
| 56 | ASP_CLK | O | ASP CLK |
| 57 | ASP_DAT | O | ASP Data |
| 58 | N.C. | - | No Connection |
| 59 | N.C. | - | No Connection |
| 60 | N.C. | - | No Connection |
| 61 | EDATA | I/O | Eeprom Data In/Out |
| 62 | ECLK | O | Eeprom Clock Output |
| 63 | ECS | O | Eeprom CS Output |
| 64 | N.C. | - | No Connection |
| 65 | TUNED | I/O | Tuner Tuned Signal |

| Pin No. | Mark | I/O | Function |
|---|---|---|---|
| 66 | STEREO | I/O | Tuner Stereo Signal |
| 67 | N.C. | - | No Connection |
| 68 | N.C. | - | No Connection |
| 69 | N.C. | - | No Connection |
| 70 | MOTOR_H | O | Deck Motor Control Out (H: ON) |
| 71 | PL_H | O | Deck Plunger Control Out (H: On) |
| 72 | N.C. | - | No Connection |
| 73 | N.C. | - | No Connection |
| 74 | TAPE_EJECT | O | Tape Eject SW I/P (L: SW On) |
| 75 | PHOTO | I | Deck Photo SW Input |
| 76 | REC_H | O | Deck Rec Control Output (Active High) |
| 77 | N.C. | - | No Connection |
| 78 | DMT | O | Deck Mute Output (L: Mute On) |
| 79 | TYPE / _SELECT | I | Type Select |
| 80 | N.C. | - | No Connection |
| 81 | N.C. | - | No Connection |
| 82 | N.C. | - | No Connection |
| 83 | N.C. | - | No Connection |
| 84 | N.C. | - | No Connection |
| 85 | N.C. | - | No Connection |
| 86 | N.C. | - | No Connection |
| 87 | N.C. | - | No Connection |
| 88 | N.C. | - | No Connection |
| 89 | N.C. | - | No Connection |
| 90 | MP1 | - | No Connection |
| 91 | MP2 | - | No Connection |
| 92 | CRTIMER | I/O | CR Timer |
| 93 | N.C. | - | No Connection |
| 94 | S/W RST | - | Switch Reset |
| 95 | VREF - | - | D/A Converter Reference GND |
| 96 | VOL_JOG1 | I | Jog Input 1 |
| 97 | VOL_JOG2 | I | Jog Input 2 |
| 98 | N.C. | - | No Connection |
| 99 | N.C. | - | No Connection |
| 100 | VREF + | - | D/A Converter Reference Voltage |

# 22. Troubleshooting Flowchart (CD Section Circuit)

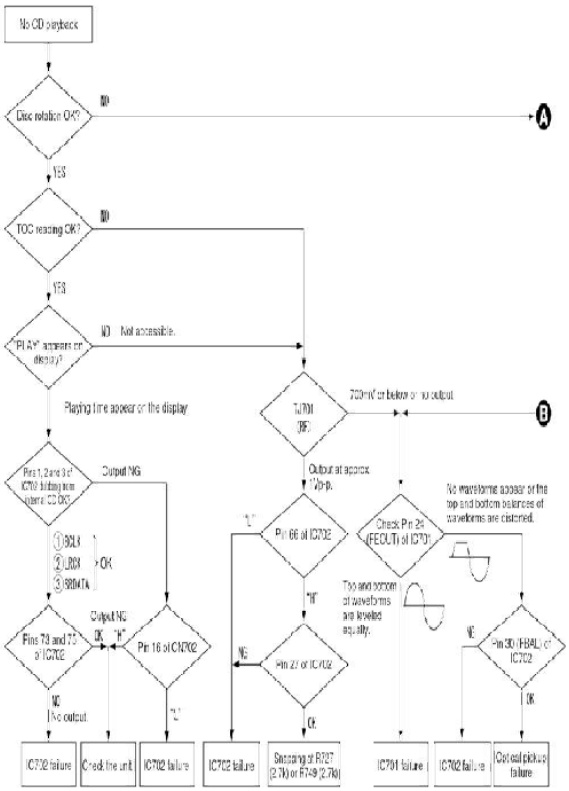
No CD playback
Disc rotation OK?
NO
A
YES
TOC reading OK?
NO
YES
"PLAY" appears on display?
NO
Not accessible.
Playing time appear on the display
TJ701 (RF)
700mV or below or no output
B
Output at approx. 1V p-p.
Pins 1, 2 and 3 of IC702 (Jitting from internal CD OK)
Output NG
1 BCLK
2 LRCK
3 SRDATA
OK
Pin 66 of IC702
"L"
"H"
Check Pin 24 (FECUT) of IC701
No waveforms appear or the top and bottom balances of waveforms are distorted.
Top and bottom of waveforms are leveled equally.
Pins 73 and 75 of IC702
Output NG
OK
"H"
Pin 16 of CN702
"L"
NG
Pin 27 of IC702
OK
NG
Pin 30 (FBAL) of IC702
OK
NG
No output.
IC702 failure
Check the unit
IC702 failure
IC702 failure
Snapping of R727 (2.7k) or R749 (2.7k)
IC701 failure
IC702 failure
Optical pickup failure

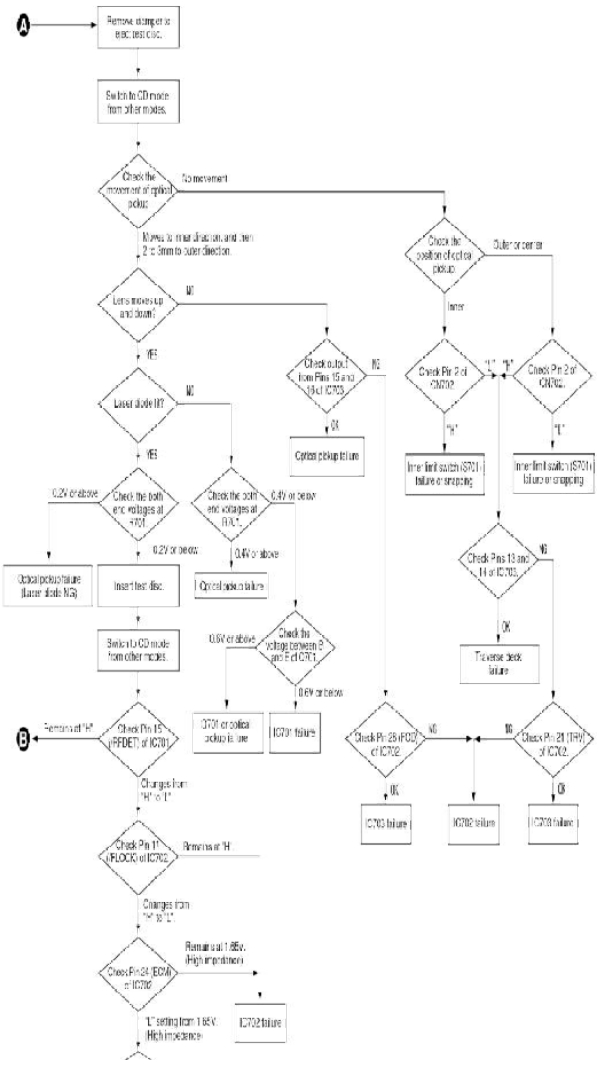


# 23. Exploded Views

## 23.1. Cabinet Parts Location

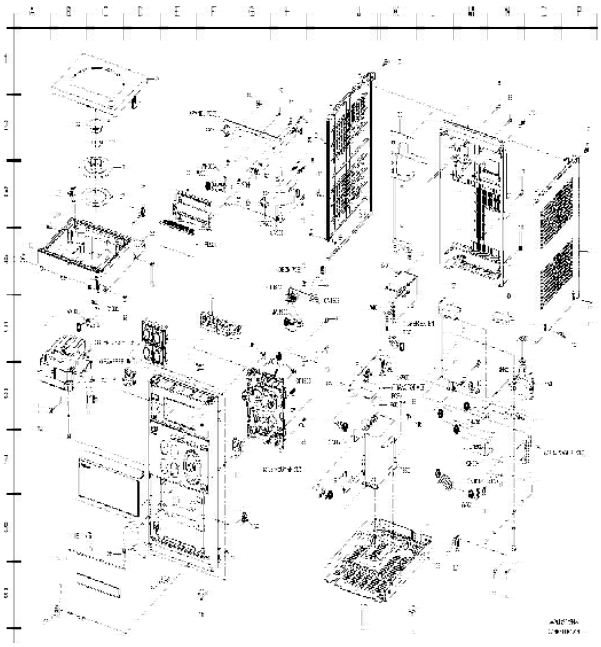

## 23.2. Deck Mechanism (RAA4402-1S) & Traverse Part Location

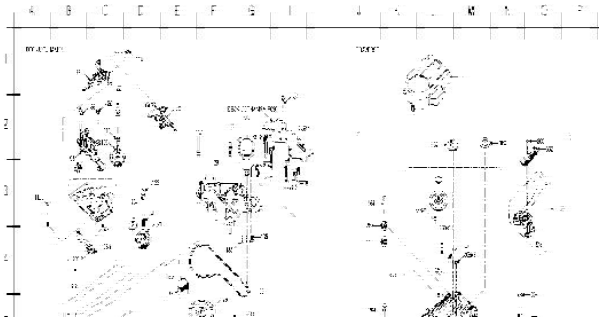

## 23.3. Packaging

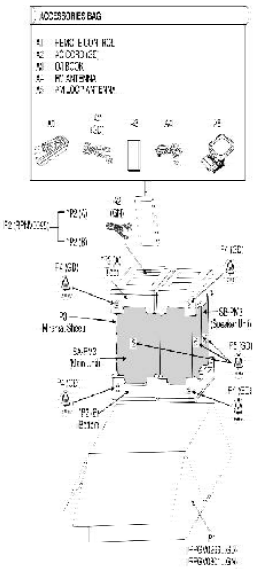

# 24. Replacement Parts List

**Notes:**

- **Important safety notice:**
  **Components identified by ⚠ mark have special characteristics important for safety.**
  **Furthermore, special parts which have purposes of fire-retardent (resistors), high-quality sound (capacitors), low noise (resistors), etc are used.**
  **When replacing any of these components, be sure to use only manufacturer's specified parts shown in the parts list.**
- **The parenthesized indications in the Remarks columns specify the areas or colour. (Refer to the cover page for area or colour)**
  **Parts without these indications can be used for all areas.**
- **Warning: This product uses a laser diode. Refer to "Precaution of Laser Diode".**
- **Capacitor values are in microfarads ( F) unless specified otherwise, P= Pico-farads (pF), F= Farads.**
- **Resistance values are in ohms, unless specified otherwise, 1K=1,000 (OHM).**
- **The marking (RTL) indicates that the Retention Time is limited for this items. After the discontinuation of this assembly in production, the item will continue to be available for a specific period of time. The retention period of a availability is dependent on the type of assembly, and in accordance with the laws governing part and product retention. After the end of this period, the assembly will no longer be available.**
- **[M] Indicates in the Remarks columns indicates parts supplied by**

## PAVCSG.

## - Reference for O/I book languages are as follows:

| | | | | | | | |
|---|---|---|---|---|---|---|---|
| Ar: | Arabic | Du: | Dutch | It: | Italian | Sp: | Spanish |
| Cf: | Canadian French | En: | English | Ko: | Korean | Sw: | Swedish |
| Cz: | Czech | Fr: | French | Po: | Polish | Co: | Traditional Chinese |
| Da: | Danish | Ge: | German | Ru: | Russian | Cn: | Simplified Chinese |
| Pe: | Persian | Ur: | Ukraine | | | | |

| Ref. No. | Part No. | Part Name & Description | Remarks |
|---|---|---|---|
| | | CABINET AND CHASSIS | |
| | | | |
| 1 | REEV0095 | 15P FFC (PANEL-MAIN) | [M] |
| 2 | REEV0096 | 19P FFC (DECK-MAIN) | [M] |
| 3 | REEV0097 | 17P FFC (MAIN-CD) | [M] |
| 4 | RFKGAPM3EE-S | FRONT PANEL ASS'Y | [M] |
| 6 | RGLV0061-Q | LIGHTING TIP | [M] |
| 7 | RFKHAPM3GD-S | REAR CABINET ASS'Y | [M]GD |
| 7 | RFKHAPM3GN-S | REAR CABINET ASS'Y | [M]GN |
| 8 | RGUV0134A-S | FUNCTION BUTTON | [M] |
| 9 | RGUV0136-S | POWER BUTTON | [M] |
| 11 | RGUV0138-S | CASS EJECT BUTTON | [M] |
| 12 | RGUV0139-S | CONTROL BUTTON | [M] |
| 13 | XTB3+10JFJ | SCREW | [M] |
| 14 | RGWV0039-1S | VOLUME KNOB | [M] |
| 15 | RHD26046-L | SCREW | [M] |
| 16 | RHDV30002 | SCREW | [M] |
| 17 | RHM0001 | MAGNET | [M] |
| 18 | RKA0072-KJ | LEG CUSHION | [M] |
| 19 | RKFV0053A-S | CASS LID | [M] |
| 20 | RKFV0054-S | CD LID | [M] |
| 21 | RKMV0055A-H | SIDE PANEL L | [M] |
| 22 | RKMV0056A-H | SIDE PANEL R | [M] |
| 23 | RKMV0057A-H | TOP CABINET | [M] |
| 24 | RMBV0041 | CD LID OPEN SPRING | [M] |
| 25 | RMBV0042 | CASS LID SPRING | [M] |
| 27 | RMF0188-1L | CLAMPER SHEET | [M] |
| 28 | RMKV0045 | BOTTOM CHASSIS | [M] |
| 29 | RMNV0062 | FL HOLDER | [M] |
| 30 | RMQ0152-E | FIXTURE | [M] |
| 31 | RMQ0496-K | CD CLAMPER | [M] |
| 33 | RSCV0067 | REAR SHEILD | [M] |
| 34 | XTV3+12GFJ-M | SCREW | [M] |
| 35 | RUS757ZAA | CASS HALF SPRING | [M] |
| 36 | RXGX0002 | DAMPER GEAR | [M] |
| 37 | RMYV0053 | HEAT SINK | [M] |
| 38 | XTV3+10GFJ-M | SCREW | [M] |
| 39 | XTV3+8FFJ | SCREW | [M] |
| 40 | RSC0669 | SP EARTH R | [M] |
| | | | |
| | | CASSETTE DECK | |
| | | | |

| Ref. No. | Part No. | Part Name & Description | Remarks |
|---|---|---|---|
| 101 | RED0067-2 | R/P HEAD BLOCK UNIT | [M] |
| 103 | RDG0300 | REEL BASE GEAR | [M] |
| 104 | RDG0301 | WINDING RELAY GEAR | [M] |
| 105 | RDK0026-4 | MAIN GEAR | [M] |
| 107 | RDV0033-4 | WINDING BELT | [M] |
| 108 | RDV0064-1 | CAPSTAN BELT | [M] |
| 110 | RMB0312 | TRIGGER LEVER SPRING | [M] |
| 111 | RMB0400 | REEL SPRING | [M] |
| 112 | RMB0403 | HEAB PANEL SPRING | [M] |
| 113 | RMB0404 | BRAKE ROD SPRING | [M] |
| 114 | RMB0406-5 | FR LEVER SPRING | [M] |
| 115 | RMB0408 | THRUST SPRING | [M] |
| 116 | RML0370-4 | TRIGGER LEVER | [M] |
| 117 | RML0371 | FR LEVER | [M] |
| 118 | RML0372-2 | WINDING LEVER | [M] |
| 119 | RML0374-2 | EJECT LEVER | [M] |
| 120 | RMM0131-1 | BRAKE ROD | [M] |
| 121 | RMM0133-1 | EJECT ROD | [M] |
| 122 | RMQ0519 | REEL HUB | [M] |
| 123 | RMS0398-1 | MOVING CORE | [M] |
| 124 | RXQ0470-2 | PLUNGER | [M] |
| 125 | RMC0061 | PACK SPRING | [M] |
| 126 | RXF0061-1 | FLYWHEEL F ASS'Y | [M] |
| 128 | RXG0040 | FF RELAY GEAR ASS'Y | [M] |
| 129 | RMK0283A-2 | SUB-CHASSIS | [M] |
| 130 | RXL0124 | PINCH ROLLER F ASS'Y | [M] |
| 130-1 | RMB0401 | PINCH ARM SPRING F | [M] |
| 132 | RXL0126 | WINDING ARM ASS'Y | [M] |
| 133 | RXQ0412-3 | HEAD PANEL ASS'Y | [M] |
| 133-1 | RMB0405-1 | FR ROD SPRING | [M] |
| 133-2 | RMM0132-1 | FR ROD | [M] |
| 134 | REM0120 | CAP MOTOR ASS'Y | [M] |
| 135 | RHD26022-1 | MOTOR SCREW | [M] |
| 136 | XTW2+5LFJ | HEAD BLOCK UNIT SCRE | [M] |
| 137 | XTW26+10SFJ | SUB-CHASSIS SCREW | [M] |
| 138 | XYC2+JF17FJ | PCB EARTH SCREW | [M] |
| 139 | RFKJSTR280PP | CHASSIS ASS'Y | [M] |
| | | | |
| | | TRAVERSE DECK | |
| | | | |
| 358 | RFKNCT121157 | SPINDLE MOTOR ASS'Y | [M] |
| 358-1 | RXQ0632 | TRVAERSE MOTOR UNIT | [M] |
| 358-2 | XQN17+C28FJ | SCREW | [M] |
| 359 | RDG0455 | TRVAERSE GEAR (A) | [M] |
| 360 | RDG0456-1 | TRVAERSE GEAR (B) | [M] |
| 361 | RXQ0999 | OPU UNIT | [M] |
| 362 | RMM0218-1 | TRAVERSE DRIVE RACK | [M] |
| 363 | SNSD38-1 | SCREW | [M] |
| 364 | RMS0757-1 | FIXED PIN | [M] |
| 365 | RMG0703-R | FLOATING RUBBER | [M] |
| 366 | RME0109 | FLOATING SPRING | [M] |
| 367 | XTN2+6GFJ | SCREW | [M] |
| 368 | RMR1395-X | MIDDLE CHASSIS | [M] |
| 369 | RAE0157A-V | TRV UNIT WITHOUT SER | [M] |
| 370 | RMR1396-K | TRAVERSE COVER | [M] |
| | | | |
| | | PRINTED CIRCUIT BOARD | |

| | | | |
|---|---|---|---|
| | | PRINTED CIRCUIT BOARD | |

| Ref. No. | Part No. | Part Name & Description | Remarks |
|---|---|---|---|
| | | | |
| | REPV0092A | DECK P.C.B. | [M] / (RTL) |
| | REPV0088B | MAIN/POWER P.C.B. / PANEL P.C.B. / TUNER EXTENT P.C.B. / TRANSFORMER P.C.B. / CD OPEN/CLOSE P.C.B. | [M] / (RTL) GN |
| | REPV0088D | MAIN/POWER P.C.B. / PANEL P.C.B. / TUNER EXTENT P.C.B. / TRANSFORMER P.C.B. / CD OPEN/CLOSE P.C.B. | [M] / (RTL) GD |
| | REPX0321H | DECK MECHANISM P.C.B. | [M] / (RTL) |
| | REPV0082A | CD SERVO P.C.B. | [M] / (RTL) |
| | | | |
| | | INTEGRATED CIRCUITS | |
| | | | |
| IC500 | AN17808B | IC POWER AMP | [M] |
| IC800 | C1BB00000732 | IC ASP | [M] |
| IC802 | C0DBZGC00067 | IC 3.3V REGULATOR | [M] |
| IC803 | MN101C49GHD1 | IC MICROPROCESSOR | [M] |
| IC900 | C0HBB0000057 | IC FL DRIVER | [M] |
| IC971 | CNB13030R2AU | PHOTO INTERRUPTOR | [M] |
| IC1000 | C1AA00000612 | IC ANALOG SWITCH | [M] |
| IC1001 | AN7326K | IC P/B REC AMP | [M] |
| IC7001 | MN6627954MA | IC SERVO PROCESSOR/DIGITAL SIGNAL PROCESSOR/DIGITAL FILTER D/A CONVERTER | [M] |
| IC7002 | BA5948FPE2 | IC 4 CH DRIVE | [M] |
| | | | |
| | | TRANSISTORS | |
| | | | |
| Q500 | B1GCCFGA0006 | TRANSISTOR | [M] |
| Q501 | B1AACF000063 | TRANSISTOR | [M] |
| Q503 | B1BCCG000002 | TRANSISTOR | [M] |
| Q504 | B1AACF000063 | TRANSISTOR | [M] |
| Q505 | B1AAJC000019 | TRANSISTOR | [M] |
| Q507 | B1AAJC000019 | TRANSISTOR | [M] |
| Q530 | 2SD0592ARA | TRANSISTOR | [M] |
| Q600 | B1AACF000063 | TRANSISTOR | [M] |
| Q601 | 2SC3940ARA | TRANSISTOR | [M] |
| Q602 | KRC102MTA | TRANSISTOR | [M] |
| Q603 | 2SB0621AHA | TRANSISTOR | [M] |
| Q750 | B1GDCFGG0026 | TRANSISTOR | [M] |
| Q751 | B1GBCFJJ0044 | TRANSISTOR | [M] |
| Q801 | B1GBCFGG0030 | TRANSISTOR | [M] |
| Q802 | B1GBCFGG0030 | TRANSISTOR | [M] |
| Q803 | B1GBCFJJ0044 | TRANSISTOR | [M] |
| Q804 | B1GBCFNN0038 | TRANSISTOR | [M] |
| Q807 | B1GBCFGJ0016 | TRANSISTOR | [M] |
| Q808 | B1GBCFGJ0016 | TRANSISTOR | [M] |
| Q1101 | B1ABGC000005 | TRANSISTOR | [M] |
| Q1201 | B1ABGC000005 | TRANSISTOR | [M] |
| Q1302 | B1GDCFJJ0002 | TRANSISTOR | [M] |
| Q1303 | B1GBCFGH0001 | TRANSISTOR | [M] |
| Q1304 | B1GDCFGH0002 | TRANSISTOR | [M] |
| Q1309 | B1AAGC000006 | TRANSISTOR | [M] |
| Q1310 | B1AAGC000006 | TRANSISTOR | [M] |
| Q1312 | B1ABCF000011 | TRANSISTOR | [M] |
| Q1314 | B1GDCFGH0002 | TRANSISTOR | [M] |
| Q1315 | B1ACKD000006 | TRANSISTOR | [M] |
| Q1316 | 2SD09650RA | TRANSISTOR | [M] |
| Q1317 | B1ABGC000005 | TRANSISTOR | [M] |
| Q7601 | B1ADCF000001 | TRANSISTOR | [M] |

| Ref. No. | Part No. | Part Name & Description | Remarks |
|---|---|---|---|
| | | | |
| | | DIODES | |
| | | | |
| D501 | B0EAMM000038 | DIODE | [M] |
| D502 | B0EAMM000038 | DIODE | [M] |
| D504 | B0EAMM000038 | DIODE | [M] |
| D505 | B0EAMM000038 | DIODE | [M] |
| D506 | B0BC8R100004 | DIODE | [M] |
| D508 | B0BC5R600003 | DIODE | [M] |
| D525 | B0EAKM000117 | DIODE | [M] |
| D526 | B0EAKM000117 | DIODE | [M] |
| D527 | B0EAKM000117 | DIODE | [M] |
| D600 | B0ACCK000005 | DIODE | [M] |
| D602 | B0EAKM000117 | DIODE | [M] |
| D603 | B0EAKM000117 | DIODE | [M] |
| D604 | B0EAKM000117 | DIODE | [M] |
| D605 | B0EAKM000117 | DIODE | [M] |
| D606 | B0EAKM000117 | DIODE | [M] |
| D607 | B0BC6R700006 | DIODE | [M] |
| D608 | B0ACCK000005 | DIODE | [M] |
| D609 | B0EAKM000117 | DIODE | [M] |
| D610 | B0BC026A0007 | DIODE | [M] |
| D611 | B0EAKM000117 | DIODE | [M] |
| D802 | B0ACCK000005 | DIODE | [M] |
| D805 | B0ACCE000003 | DIODE | [M] |
| D806 | B0ACCE000003 | DIODE | [M] |
| D807 | B0ACCK000005 | DIODE | [M] |
| D900 | B0BC5R600003 | DIODE | [M] |
| D906 | B3AAA0000489 | DIODE | [M] |
| D971 | MA2C16500E | DIODE | [M] |
| D1301 | B0ACCK000005 | DIODE | [M] |
| D7650 | MAZ80560ML | DIODE | [M] |
| | | | |
| | | VARIABLE RESISTORS | |
| | | | |
| VR900 | EVEJ1CF3024B | VR VOLUME JOG | [M] |
| | | | |
| | | SWITCHES | |
| | | | |
| S900 | EVQ21405RJ | SW STOP/-DEMO | [M] |
| S901 | EVQ21405RJ | SW CD | [M] |
| S902 | EVQ21405RJ | SW TAPE | [M] |
| S903 | EVQ21405RJ | SW TUNER/BAND | [M] |
| S904 | EVQ21405RJ | SW FF | [M] |
| S905 | EVQ21405RJ | SW REW | [M] |
| S906 | EVQ21405RJ | SW POWER | [M] |
| S907 | EVQ21405RJ | SW TAPE_EJECT | [M] |
| S908 | EVQ21405RJ | SW BASS/TREBLE | [M] |
| S909 | EVQ21405RJ | SW REC | [M] |
| S971 | K0J1BB000017 | SW MODE | [M] |
| S972 | K0J1BB000021 | SW HALF | [M] |
| S973 | K0J1BB000021 | SW CR02 | [M] |
| S975 | K0J1BB000021 | SW RECINH_F | [M] |
| S1000 | RSP1A026-Q | CD OPEN/CLOSE | [M] |
| S7201 | RSH1A048-A | SW RESET | [M] |
| | | | |
| | | CONNECTORS | |

| Ref. No. | Part No. | Part Name & Description | Remarks |
|---|---|---|---|
| | | | |
| CN400 | K1KA02AA0180 | 2P CONNECTOR | [M] |
| CN401 | K1MP10A00003 | 10P WIRE HOLDER | [M] |
| CN505B | K1KA08AA0319 | 8P CONNECTOR | [M] |
| CN801 | K1MN17AA0004 | 17P CONNECTOR | [M] |
| CN802 | K1MN15A00049 | 15P FFC CONNECTOR | [M] |
| CN804 | K1MN19A00027 | 19P CONNECTOR | [M] |
| CN900B | K1MP05A00004 | 5P CONNECTOR | [M] |
| CN901 | K1MN15A00049 | 15P FFC CONNECTOR | [M] |
| CN1303 | K1MN19BA0005 | 19P CONNECTOR | [M] |
| CN7001 | K1MN16B00154 | 16P CONNECTOR | [M] |
| CN7002 | K1MN17B00032 | 17P CONNECTOR | [M] |
| | | | |
| CP1301 | K1MY05AA0043 | 5P CONNECTOR | [M] |
| CP1902 | K1KA09BA0153 | 9P CONNECTOR | [M] |
| | | | |
| CS971 | RJU071H09M1 | 9P CONNECTOR | [M] |
| | | | |
| | | COILS & TRANSFORMERS | |
| | | | |
| L203 | J0JBC0000019 | CHIP INDUCTOR | [M] |
| L204 | G0C3R3JA0027 | COIL | [M] |
| L300 | G0AR76Y00002 | CHOKE COIL | [M] |
| L303 | G0AR76Y00002 | CHOKE COIL | [M] |
| L600 | G0B371HA0005 | LINE FILTER | [M] |
| L801 | J0JKB0000020 | EMI BEAD CORE | [M] |
| L802 | J0JKB0000020 | EMI BEAD CORE | [M] |
| L803 | J0JKB0000020 | EMI BEAD CORE | [M] |
| L804 | G0C3R3JA0027 | COIL | [M] |
| L805 | G0C3R3JA0027 | COIL | [M] |
| L812 | J0JKB0000020 | EMI BEAD CORE | [M] |
| L901 | G0C3R3JA0027 | COIL | [M] |
| L905 | G0C101JA0027 | COIL | [M] |
| L1301 | G2ZZ00000024 | BIAS OCS COIL | [M] |
| L1302 | G0C470JA0052 | RF CHOKE COIL | [M] |
| | | | |
| T600 | RTP1H3E002 | SUB TRANSFORMER | [M] |
| T601 | G4CYAYY00064 | POWER TRANSFORMER | [M] |
| | | | |
| | | COMPONENT COMBINATIONS | |
| | | | |
| Z401 | ENG06816QF | TUNER PACK | [M]GN |
| Z401 | ENG07811QF | TUNER PACK | [M]GD |
| Z600 | ERZV10V511CS | ZENER | [M] |
| Z901 | B3RAD0000125 | REMOTE SENSOR | [M] |
| | | | |
| | | RELAY | |
| | | | |
| RL600 | K6B1ADA00011 | RELAY | [M] |
| | | | |
| | | OSCILLATORS | |
| | | | |
| X801 | H4Z8004AA001 | CERAMIC RESONATOR | [M] |
| X802 | H0A327200100 | CRYSTAL OSCILLATOR | [M] |
| X7201 | H2B169500005 | CRYSTAL OSCILLATOR | [M] |

| Ref. No. | Part No. | Part Name & Description | Remarks |
|---|---|---|---|
| | | | |
| | | DISPLAY TUBE | |
| | | | |
| FL900 | A2BB00000157 | FL DISPLAY | [M] |
| | | | |
| | | FUSE | |
| | | | |
| F1 | K5D631BLA012 | FUSE | [M] |
| | | | |
| | | FUSE HOLDERS | |
| | | | |
| FC600 | EYF52BCY | FUSE CLIP | [M] |
| FC601 | EYF52BCY | FUSE CLIP | [M] |
| | | | |
| | | FUSE PROTECTOR | |
| | | | |
| FP552 | K5G202A00044 | FUSE PROTECTOR | [M] |
| | | | |
| | | JACKS | |
| | | | |
| JK501 | K4BC04B00123 | JK RED/BLACK SPEAKER | [M] |
| JK600 | K2AA2B000015 | JK AC INLET | [M] |
| JK900 | K2HC103B0162 | JK HEADPHONE | [M] |
| | | | |
| | | EARTH TERMINAL | |
| | | | |
| E1 | RMBV0043 | EARTH SPRING | [M] |
| | | | |
| | | WIRES | |
| | | | |
| W400 | REXV0060 | 2P WIRE (CASS MOTOR) | [M] |
| W401 | RWJ0210145SQ | 10P WIRE(TUNER-MAIN) | [M] |
| W505 | REXV0064 | 8P WIRE (TRANS-MAIN) | [M] |
| W900 | RWJ1105120QX | 5P FLAT WIRE | [M] |
| | | | |
| WH900 | RMR0314 | CABLE HOLDER | [M] |
| | | | |
| JW1903 | RWJ0102050KR | 2P (MOTOR WIRE) | [M] |
| | | | |
| | | PACKING MATERIALS | |
| | | | |
| P1 | RPGV0269 | PACKING CASE | [M]GD |
| P1 | RPGV0301 | PACKING CASE | [M]GN |
| P2 | RPNV0095 | POLYFOAM | [M] |
| P3 | RPHV0001-1 | MIRAMAT SHEET | [M] |
| P4 | RQLA0781 | KOREA RECYCLE STICKE | [M]GD |
| P5 | RQLA0790 | KOREA RECYCLE STICKE | [M]GD |
| | | | |
| | | ACCESSORIES | |
| | | | |
| A1 | N2QAYB000002 | REMOTE CONTROL | [M] |
| A1-1 | RKK-HTR0283 | R/C BATTERY COVER | [M] |
| A2 | K2CJ2DA00010 | AC CORD | [M]GN |
| A2 | RJA0078-1X | AC CORD | [M]GD |
| A3 | RQTV0085-B | O/I BOOK (En) | [M]GN |

| Ref. No. | Part No. | Part Name & Description | Remarks |
|---|---|---|---|
| A3 | RQTV0118-Z | O/I BOOK (Ko) | [M]GD |
| A4 | RSA0007-L | FM ANTENNA | [M] |
| A5 | N1DAAAA00001 | AM LOOP ANTENNA | [M] |
| | | | |
| | | CHIP RESISTORS | |
| | | | |
| W555 | ERJ3GEY0R00V | CHIP JUMPER | [M] |
| W7001 | ERJ6GEY0R00V | CHIP JUMPER | [M] |
| W7002 | ERJ6GEY0R00V | CHIP JUMPER | [M] |
| W7003 | ERJ6GEY0R00V | CHIP JUMPER | [M] |
| W7004 | ERJ3GEY0R00V | CHIP JUMPER | [M] |
| W7005 | ERJ3GEY0R00V | CHIP JUMPER | [M] |
| W7006 | ERJ6GEY0R00V | CHIP JUMPER | [M] |
| W7007 | ERJ6GEY0R00V | CHIP JUMPER | [M] |
| W7008 | ERJ6GEY0R00V | CHIP JUMPER | [M] |
| W7009 | ERJ3GEY0R00V | CHIP JUMPER | [M] |
| W7010 | ERJ3GEY0R00V | CHIP JUMPER | [M] |
| W7011 | ERJ3GEY0R00V | CHIP JUMPER | [M] |
| W7012 | ERJ3GEY0R00V | CHIP JUMPER | [M] |
| W7013 | ERJ3GEY0R00V | CHIP JUMPER | [M] |
| W7014 | ERJ3GEY0R00V | CHIP JUMPER | [M] |
| W7015 | ERJ3GEY0R00V | CHIP JUMPER | [M] |
| W7016 | ERJ3GEY0R00V | CHIP JUMPER | [M] |
| W7017 | ERJ3GEY0R00V | CHIP JUMPER | [M] |
| W7018 | ERJ3GEY0R00V | CHIP JUMPER | [M] |
| W7019 | ERJ3GEY0R00V | CHIP JUMPER | [M] |
| W7020 | ERJ3GEY0R00V | CHIP JUMPER | [M] |
| W7021 | ERJ3GEY0R00V | CHIP JUMPER | [M] |
| W7022 | ERJ3GEY0R00V | CHIP JUMPER | [M] |
| W7023 | ERJ3GEY0R00V | CHIP JUMPER | [M] |
| W7024 | ERJ3GEY0R00V | CHIP JUMPER | [M] |
| W7025 | ERJ3GEY0R00V | CHIP JUMPER | [M] |
| W7026 | ERJ3GEY0R00V | CHIP JUMPER | [M] |
| W7027 | ERJ3GEY0R00V | CHIP JUMPER | [M] |
| | | | |
| WA1 | ERJ3GEY0R00V | CHIP JUMPER | [M] |
| WA2 | ERJ3GEY0R00V | CHIP JUMPER | [M] |
| WA3 | ERJ3GEY0R00V | CHIP JUMPER | [M] |
| WA4 | ERJ3GEY0R00V | CHIP JUMPER | [M] |
| WA5 | ERJ3GEY0R00V | CHIP JUMPER | [M] |
| WA6 | ERJ3GEY0R00V | CHIP JUMPER | [M] |
| WA7 | ERJ3GEY0R00V | CHIP JUMPER | [M] |
| WA8 | ERJ3GEY0R00V | CHIP JUMPER | [M] |
| WA9 | ERJ3GEY0R00V | CHIP JUMPER | [M] |
| WA10 | ERJ3GEY0R00V | CHIP JUMPER | [M] |
| WA11 | ERJ3GEY0R00V | CHIP JUMPER | [M] |
| WA1061 | ERJ3GEY0R00V | CHIP JUMPER | [M] |
| | | | |
| | | RESISTORS | |
| | | | |
| R1 | D0GB222JA041 | 2.2K 1/16W | [M] |
| R2 | D0GB222JA041 | 2.2K 1/16W | [M] |
| R3 | D0GB121JA007 | 120 1/16W | [M] |
| R4 | D0GB121JA007 | 120 1/16W | [M] |
| R5 | D0GB222JA041 | 2.2K 1/16W | [M] |
| R6 | D0GB222JA041 | 2.2K 1/16W | [M] |
| R7 | D0GB121JA007 | 120 1/16W | [M] |

| | | | |
|---|---|---|---|
| [illegible] | [illegible] | [illegible] | [illegible] |

| Ref. No. | Part No. | Part Name & Description | Remarks |
|---|---|---|---|
| R8 | D0GB121JA007 | 120 1/16W | [M] |
| R201 | D0GB562JA007 | 5.6K 1/16W | [M] |
| R202 | D0GB562JA007 | 5.6K 1/16W | [M] |
| R203 | D0GB272JA007 | 2.7K 1/16W | [M] |
| R204 | ERJ3GEYJ682V | 6.8K 1/16W | [M] |
| R205 | ERJ3GEYJ822V | 8.2K 1/16W | [M] |
| R206 | D0GB153JA007 | 15K 1/16W | [M] |
| R207 | ERJ3GEYJ822V | 8.2K 1/16W | [M] |
| R209 | D0GB183JA007 | 18K 1/16W | [M] |
| R210 | ERJ3GEYJ102V | 1K 1/16W | [M] |
| R211 | D0GB392JA007 | 3.9K 1/16W | [M] |
| R212 | D0GB182JA007 | 1.8K 1/16W | [M] |
| R228 | D0GB561JA007 | 560 1/16W | [M] |
| R230 | D0GB104JA007 | 100K 1/16W | [M] |
| R251 | D0GB821JA007 | 820 1/16W | [M] |
| R285 | ERJ3GEYJ822V | 8.2K 1/16W | [M] |
| R291 | ERJ3GEYJ682V | 6.8K 1/16W | [M] |
| R292 | ERJ3GEYJ682V | 6.8K 1/16W | [M] |
| R295 | ERJ3GEYJ103V | 10K 1/16W | [M] |
| R296 | D0GB330JA007 | 33 1/16W | [M] |
| R383 | ERJ3GEY0R00V | 0 1/16W | [M] |
| R385 | ERJ3GEY0R00V | 0 1/16W | [M] |
| R401 | D0GB562JA007 | 5.6K 1/16W | [M] |
| R402 | D0GB562JA007 | 5.6K 1/16W | [M] |
| R403 | D0GB272JA007 | 2.7K 1/16W | [M] |
| R404 | ERJ3GEYJ682V | 6.8K 1/16W | [M] |
| R406 | D0GB153JA007 | 15K 1/16W | [M] |
| R409 | D0GB183JA007 | 18K 1/16W | [M] |
| R410 | ERJ3GEYJ102V | 1K 1/16W | [M] |
| R411 | D0GB392JA007 | 3.9K 1/16W | [M] |
| R412 | D0GB182JA007 | 1.8K 1/16W | [M] |
| R428 | D0GB561JA007 | 560 1/16W | [M] |
| R430 | D0GB104JA007 | 100K 1/16W | [M] |
| R441 | ERD2FCVG330T | 33 1/4W | [M] |
| R442 | ERJ6GEYJ682V | 6.8K 1/10W | [M] |
| R443 | D0GB332JA007 | 3.3K 1/16W | [M] |
| R444 | D0GB332JA007 | 3.3K 1/16W | [M] |
| R445 | ERJ6GEYJ682V | 6.8K 1/10W | [M] |
| R446 | D0GB273JA007 | 27K 1/16W | [M] |
| R447 | D0GB273JA007 | 27K 1/16W | [M] |
| R451 | D0GB821JA007 | 820 1/16W | [M] |
| R485 | ERJ3GEYJ822V | 8.2K 1/16W | [M] |
| R491 | ERJ3GEYJ682V | 6.8K 1/16W | [M] |
| R492 | ERJ3GEYJ682V | 6.8K 1/16W | [M] |
| R495 | ERJ3GEYJ103V | 10K 1/16W | [M] |
| R496 | D0GB330JA007 | 33 1/16W | [M] |
| R501 | D0GB1R0JA007 | 1 1/16W | [M] |
| R502 | D0GB1R0JA007 | 1 1/16W | [M] |
| R503 | D0GB1R0JA007 | 1 1/16W | [M] |
| R504 | D0GB221JA041 | 220 1/16W | [M] |
| R505 | D0GB104JA007 | 100K 1/16W | [M] |
| R507 | D0GB1R0JA007 | 1 1/16W | [M] |
| R510 | ERJ6GEYJ121V | 120 1/10W | [M] |
| R511 | ERJ6GEYJ121V | 120 1/10W | [M] |
| R514 | D0GB222JA041 | 2.2K 1/16W | [M] |
| R515 | D0GB152JA007 | 1.5K 1/16W | [M] |
| R516 | ERJ6GEYJ391V | 390 1/10W | [M] |

| | | | |
|---|---|---|---|
| [illegible] | [illegible] | [illegible] | [illegible] |

| Ref. No. | Part No. | Part Name & Description | Remarks |
|---|---|---|---|
| R517 | D0GB471JA041 | 470 1/16W | [M] |
| R518 | ERJ3GEYJ102V | 1K 1/16W | [M] |
| R520 | D0GB471JA041 | 470 1/16W | [M] |
| R552 | D0GB563JA007 | 56K 1/16W | [M] |
| R572 | D0GB563JA007 | 56K 1/16W | [M] |
| R580 | D0GB562JA007 | 5.6K 1/16W | [M] |
| R581 | ERJ3GEYJ682V | 6.8K 1/16W | [M] |
| R586 | D0GB473JA041 | 47K 1/16W | [M] |
| R600 | D0GB473JA041 | 47K 1/16W | [M] |
| R601 | D0GB220JA007 | 22 1/16W | [M] |
| R603 | D0GB821JA007 | 820 1/16W | [M] |
| R604 | D0GB472JA041 | 4.7K 1/16W | [M] |
| R605 | D0GB151JA007 | 150 1/16W | [M] |
| R606 | ERJ3GEYJ103V | 10K 1/16W | [M] |
| R607 | ERJ3GEYJ103V | 10K 1/16W | [M] |
| R608 | ERD2FCVG120T | 12 1/4W | [M] |
| R611 | D0GB332JA007 | 3.3K 1/16W | [M] |
| R750 | D0GB472JA041 | 4.7K 1/16W | [M] |
| R803 | D0GB472JA041 | 4.7K 1/16W | [M] |
| R804 | D0GB472JA041 | 4.7K 1/16W | [M] |
| R805 | ERJ3GEYJ103V | 10K 1/16W | [M] |
| R806 | ERJ3GEYJ103V | 10K 1/16W | [M] |
| R807 | ERJ3GEYJ103V | 10K 1/16W | [M] |
| R808 | ERJ3GEYJ103V | 10K 1/16W | [M] |
| R809 | D0GB101JA007 | 100 1/16W | [M] |
| R810 | D0GB101JA007 | 100 1/16W | [M] |
| R811 | D0GB101JA007 | 100 1/16W | [M] |
| R812 | D0GB101JA007 | 100 1/16W | [M] |
| R813 | D0GB101JA007 | 100 1/16W | [M] |
| R815 | ERJ3GEYJ103V | 10K 1/16W | [M] |
| R816 | ERJ3GEYJ103V | 10K 1/16W | [M] |
| R817 | D0GB101JA007 | 100 1/16W | [M] |
| R819 | ERJ3GEYJ102V | 1K 1/16W | [M] |
| R820 | ERJ3GEYJ102V | 1K 1/16W | [M] |
| R821 | D0GB474JA041 | 470K 1/16W | [M] |
| R823 | D0GB101JA007 | 100 1/16W | [M] |
| R824 | D0GB101JA007 | 100 1/16W | [M] |
| R827 | D0GB272JA007 | 2.7K 1/16W | [M] |
| R828 | D0GB472JA041 | 4.7K 1/16W | [M] |
| R829 | ERJ3GEYJ103V | 10K 1/16W | [M] |
| R830 | ERJ3GEYJ103V | 10K 1/16W | [M] |
| R831 | ERJ3GEYJ103V | 10K 1/16W | [M] |
| R832 | D0GB101JA007 | 100 1/16W | [M] |
| R833 | D0GB101JA007 | 100 1/16W | [M] |
| R834 | D0GB101JA007 | 100 1/16W | [M] |
| R835 | D0GB101JA007 | 100 1/16W | [M] |
| R837 | D0GB562JA007 | 5.6K 1/16W | [M] |
| R840 | D0GB105JA007 | 1M 1/16W | [M] |
| R841 | ERJ3GEYJ103V | 10K 1/16W | [M] |
| R842 | D0GB334JA007 | 330K 1/16W | [M] |
| R843 | ERJ3GEYJ102V | 1K 1/16W | [M] |
| R844 | ERJ3GEYJ102V | 1K 1/16W | [M] |
| R845 | ERJ3GEYJ103V | 10K 1/16W | [M] |
| R846 | D0GB472JA041 | 4.7K 1/16W | [M] |
| R847 | D0GB101JA007 | 100 1/16W | [M] |
| R848 | D0GB472JA041 | 4.7K 1/16W | [M] |
| R849 | ERJ3GEYJ102V | 1K 1/16W | [M] |

| | | | |
|---|---|---|---|
| [illegible] | [illegible] | [illegible] | [illegible] |

| Ref. No. | Part No. | Part Name & Description | Remarks |
|---|---|---|---|
| R850 | D0GB223JA041 | 22K 1/16W | [M] |
| R851 | ERJ3GEYJ103V | 10K 1/16W | [M] |
| R852 | ERJ3GEYJ103V | 10K 1/16W | [M] |
| R853 | ERJ3GEYJ102V | 1K 1/16W | [M] |
| R854 | ERJ3GEYJ102V | 1K 1/16W | [M] |
| R855 | ERJ3GEYJ102V | 1K 1/16W | [M] |
| R856 | D0GB101JA007 | 100 1/16W | [M] |
| R857 | D0GB472JA041 | 4.7K 1/16W | [M] |
| R858 | D0GB472JA041 | 4.7K 1/16W | [M] |
| R859 | D0GB472JA041 | 4.7K 1/16W | [M] |
| R861 | D0GB101JA007 | 100 1/16W | [M] |
| R862 | D0GB101JA007 | 100 1/16W | [M] |
| R863 | D0GB101JA007 | 100 1/16W | [M] |
| R864 | ERJ3GEYJ102V | 1K 1/16W | [M] |
| R865 | ERJ3GEYJ102V | 1K 1/16W | [M] |
| R866 | ERJ3GEYJ102V | 1K 1/16W | [M] |
| R867 | ERJ3GEYJ102V | 1K 1/16W | [M] |
| R868 | ERJ3GEYJ102V | 1K 1/16W | [M] |
| R869 | ERJ3GEYJ102V | 1K 1/16W | [M] |
| R870 | ERJ3GEYJ102V | 1K 1/16W | [M] |
| R871 | ERJ3GEYJ102V | 1K 1/16W | [M] |
| R872 | ERJ3GEYJ102V | 1K 1/16W | [M] |
| R873 | ERJ3GEYJ102V | 1K 1/16W | [M] |
| R877 | D0GB223JA041 | 22K 1/16W | [M] |
| R878 | D0GB223JA041 | 22K 1/16W | [M] |
| R879 | D0GB104JA007 | 100K 1/16W | [M] |
| R880 | D0GB472JA041 | 4.7K 1/16W | [M] |
| R882 | ERJ3GEYJ102V | 1K 1/16W | [M] |
| R883 | D0GB104JA007 | 100K 1/16W | [M] |
| R889 | D0GB101JA007 | 100 1/16W | [M] |
| R890 | D0GB153JA007 | 15K 1/16W | [M] |
| R891 | D0GB153JA007 | 15K 1/16W | [M] |
| R892 | D0GB104JA007 | 100K 1/16W | [M] |
| R896 | D0GB104JA007 | 100K 1/16W | [M] |
| R901 | ERJ3GEYJ122V | 1.2K 1/16W | [M] |
| R902 | D0GB152JA007 | 1.5K 1/16W | [M] |
| R903 | D0GB222JA041 | 2.2K 1/16W | [M] |
| R904 | D0GB332JA007 | 3.3K 1/16W | [M] |
| R905 | D0GB472JA041 | 4.7K 1/16W | [M] |
| R910 | ERJ3GEYJ122V | 1.2K 1/16W | [M] |
| R911 | D0GB152JA007 | 1.5K 1/16W | [M] |
| R912 | D0GB222JA041 | 2.2K 1/16W | [M] |
| R913 | D0GB332JA007 | 3.3K 1/16W | [M] |
| R915 | ERJ3GEYJ102V | 1K 1/16W | [M] |
| R917 | ERJ3GEYJ102V | 1K 1/16W | [M] |
| R918 | ERJ3GEYJ102V | 1K 1/16W | [M] |
| R920 | ERJ3GEYJ102V | 1K 1/16W | [M] |
| R922 | D0GB680JA007 | 68 1/16W | [M] |
| R923 | ERJ3GEYJ682V | 6.8K 1/16W | [M] |
| R924 | D0GB104JA007 | 100K 1/16W | [M] |
| R925 | D0GB104JA007 | 100K 1/16W | [M] |
| R926 | D0GB104JA007 | 100K 1/16W | [M] |
| R927 | D0GB104JA007 | 100K 1/16W | [M] |
| R972 | ERDS2TJ821T | 820 1/4W | [M] |
| R973 | ERDS2TJ393T | 39K 1/4W | [M] |
| R1101 | D0GB270JA007 | 27 1/16W | [M] |
| R1102 | D0GB152JA007 | 1.5K 1/16W | [M] |

| | | | |
|---|---|---|---|
| **X1402** | **DOCD1023A07** | **HUK 1/10W** | **[...]** |

| Ref. No. | Part No. | Part Name & Description | Remarks |
|---|---|---|---|
| R1103 | D0GB183JA007 | 18K 1/16W | [M] |
| R1104 | ERJ3GEYJ103V | 10K 1/16W | [M] |
| R1105 | D0GB222JA041 | 2.2K 1/16W | [M] |
| R1106 | D0GB104JA007 | 100K 1/16W | [M] |
| R1107 | ERJ3GEYJ102V | 1K 1/16W | [M] |
| R1109 | ERJ3GEYJ102V | 1K 1/16W | [M] |
| R1110 | D0GB333JA007 | 33K 1/16W | [M] |
| R1201 | D0GB270JA007 | 27 1/16W | [M] |
| R1202 | D0GB152JA007 | 1.5K 1/16W | [M] |
| R1203 | D0GB183JA007 | 18K 1/16W | [M] |
| R1204 | ERJ3GEYJ103V | 10K 1/16W | [M] |
| R1205 | D0GB222JA041 | 2.2K 1/16W | [M] |
| R1206 | D0GB104JA007 | 100K 1/16W | [M] |
| R1207 | ERJ3GEYJ102V | 1K 1/16W | [M] |
| R1209 | ERJ3GEYJ102V | 1K 1/16W | [M] |
| R1210 | D0GB333JA007 | 33K 1/16W | [M] |
| R1302 | D0GB331JA007 | 330 1/16W | [M] |
| R1303 | D0GB475JA007 | 4.7M 1/16W | [M] |
| R1304 | D0GB223JA041 | 22K 1/16W | [M] |
| R1305 | ERJ3GEYJ103V | 10K 1/16W | [M] |
| R1307 | ERD25FVJ220T | 22 1/4W | [M] |
| R1308 | ERD25FVJ220T | 22 1/4W | [M] |
| R1309 | D0AF471JA039 | 470 1/4W | [M] |
| R1313 | ERJ3GEYJ103V | 10K 1/16W | [M] |
| R1314 | ERJ3GEYJ102V | 1K 1/16W | [M] |
| R1318 | ERJ3GEYJ103V | 10K 1/16W | [M] |
| R1327 | D0GB472JA041 | 4.7K 1/16W | [M] |
| R1328 | D0GB153JA007 | 15K 1/16W | [M] |
| R1329 | D0GB472JA041 | 4.7K 1/16W | [M] |
| R1330 | ERD2FCVJ4R7T | 4.7 1/4W | [M] |
| R1331 | D0GB752JA007 | 7.5K 1/16W | [M] |
| R1332 | ERJ3GEYJ103V | 10K 1/16W | [M] |
| R1333 | ERD2FCVJ4R7T | 4.7 1/4W | [M] |
| R1334 | D0GB223JA041 | 22K 1/16W | [M] |
| R1335 | D0GB152JA007 | 1.5K 1/16W | [M] |
| R1337 | ERJ3GEYJ103V | 10K 1/16W | [M] |
| R1338 | D0GB472JA041 | 4.7K 1/16W | [M] |
| R1341 | D0GB471JA041 | 470 1/16W | [M] |
| R1342 | D0GB473JA041 | 47K 1/16W | [M] |
| R1343 | D0GB332JA007 | 3.3K 1/16W | [M] |
| R1344 | D0GB273JA007 | 27K 1/16W | [M] |
| R1345 | ERJ3GEYJ102V | 1K 1/16W | [M] |
| R1371 | D0GB223JA041 | 22K 1/16W | [M] |
| R1374 | D0GB471JA041 | 470 1/16W | [M] |
| R1401 | D0GB123JA007 | 12K 1/16W | [M] |
| R1402 | D0GB274JA007 | 270K 1/16W | [M] |
| R1403 | ERJ3GEYJ103V | 10K 1/16W | [M] |
| R1404 | D0GB223JA041 | 22K 1/16W | [M] |
| R1405 | ERJ3GEYJ103V | 10K 1/16W | [M] |
| R7028 | ERJ3GEY0R00V | 0 1/16W | [M] |
| R7111 | ERJ3GEYJ103V | 10K 1/16W | [M] |
| R7211 | D0GB823JA007 | 82K 1/16W | [M] |
| R7212 | D0GB821JA007 | 820 1/16W | [M] |
| R7214 | D0GB471JA041 | 470 1/16W | [M] |
| R7217 | ERJ3GEYJ102V | 1K 1/16W | [M] |
| R7218 | ERJ3GEYJ102V | 1K 1/16W | [M] |
| R7220 | D0GB105JA007 | 1M 1/16W | [M] |

| | | | |
|---|---|---|---|
| [illegible] | [illegible] | [illegible] | [illegible] |

| Ref. No. | Part No. | Part Name & Description | Remarks |
|---|---|---|---|
| R7221 | D0GB101JA007 | 100 1/16W | [M] |
| R7253 | D0GB100JA007 | 10 1/16W | [M] |
| R7254 | ERJ3GEYJ102V | 1K 1/16W | [M] |
| R7315 | D0GB332JA007 | 3.3K 1/16W | [M] |
| R7323 | D0GB332JA007 | 3.3K 1/16W | [M] |
| R7325 | D0GB331JA007 | 330 1/16W | [M] |
| R7327 | ERJ3GEYJ102V | 1K 1/16W | [M] |
| R7328 | ERJ3GEYJ103V | 10K 1/16W | [M] |
| R7329 | ERJ3GEYJ102V | 1K 1/16W | [M] |
| R7330 | D0GB562JA007 | 5.6K 1/16W | [M] |
| R7331 | D0GB223JA041 | 22K 1/16W | [M] |
| R7332 | ERJ3GEYJ102V | 1K 1/16W | [M] |
| R7335 | D0GB101JA007 | 100 1/16W | [M] |
| R7336 | D0GB100JA007 | 10 1/16W | [M] |
| R7339 | ERJ3GEYJ102V | 1K 1/16W | [M] |
| R7349 | D0GB183JA007 | 18K 1/16W | [M] |
| R7601 | D0GB4R7JA007 | 4.7 1/16W | [M] |
| R7650 | D0GB5R6JA007 | 5.6 1/16W | [M] |
| | | | |
| | | CAPACITORS | |
| | | | |
| C201 | F1H1H221A748 | 220P 50V | [M] |
| C203 | F1H1H221A748 | 220P 50V | [M] |
| C205 | F1H1H221A748 | 220P 50V | [M] |
| C209 | F1H1H102A219 | 1000P 50V | [M] |
| C210 | F1H1H221A748 | 220P 50V | [M] |
| C211 | F1H1H471A219 | 470P 50V | [M] |
| C212 | F1H1H102A219 | 1000P 50V | [M] |
| C216 | F1H1H102A219 | 1000P 50V | [M] |
| C230 | F1H1H103A219 | 0.01 50V | [M] |
| C233 | ECA1HAK010XB | 1 50V | [M] |
| C254 | ECA1HAK010XB | 1 50V | [M] |
| C272 | ECA1EAM222XE | 2200 25V | [M] |
| C293 | ECQB1H273JF3 | 0.027 50V | [M] |
| C297 | ECJ1VB1H122K | 1200P 50V | [M] |
| C298 | ECQV1H334JL3 | 0.33 50V | [M] |
| C299 | F1H1H331A013 | 330P 50V | [M] |
| C326 | F1H1H103A219 | 0.01 50V | [M] |
| C362 | ECJ1VB1H681K | 680P 50V | [M] |
| C363 | ECJ1VB1H681K | 680P 50V | [M] |
| C401 | F1H1H221A748 | 220P 50V | [M] |
| C403 | F1H1H221A748 | 220P 50V | [M] |
| C405 | F1H1H221A748 | 220P 50V | [M] |
| C409 | F1H1H102A219 | 1000P 50V | [M] |
| C410 | F1H1H221A748 | 220P 50V | [M] |
| C411 | F1H1H471A219 | 470P 50V | [M] |
| C412 | F1H1H102A219 | 1000P 50V | [M] |
| C416 | F1H1H102A219 | 1000P 50V | [M] |
| C430 | F1H1H103A219 | 0.01 50V | [M] |
| C433 | ECA1HAK010XB | 1 50V | [M] |
| C440 | F1H1E1530002 | 0.015 25V | [M] |
| C441 | F1H1E1530002 | 0.015 25V | [M] |
| C442 | F1H1E1530002 | 0.015 25V | [M] |
| C443 | ECA1HAK0R1XB | 0.1 50V | [M] |
| C444 | ECJ1VB1C683K | 0.068 16V | [M] |
| C445 | ECA1HAK0R1XB | 0.1 50V | [M] |
| C446 | ECJ1VB1C683K | 0.068 16V | [M] |

| | | | |
|---|---|---|---|
| [illegible] | [illegible] | [illegible] | [illegible] |

| Ref. No. | Part No. | Part Name & Description | Remarks |
|---|---|---|---|
| C447 | ECA1EPX470B | 47 25V | [M] |
| C448 | ECA1HAKR33XB | 0.33 50V | [M] |
| C449 | F1H1E1530002 | 0.015 25V | [M] |
| C454 | ECA1HAK010XB | 1 50V | [M] |
| C455 | ECJ1VB1C563K | 0.056 16V | [M] |
| C456 | ECJ1VB1C563K | 0.056 16V | [M] |
| C461 | ECJ1VB1C393K | 0.039 16V | [M] |
| C462 | ECJ1VB1C393K | 0.039 16V | [M] |
| C463 | ECA1CAK101XB | 100 16V | [M] |
| C464 | F1H1H470A230 | 47P 50V | [M] |
| C465 | F1H1H470A230 | 47P 50V | [M] |
| C472 | ECA1EAM222XE | 2200 25V | [M] |
| C493 | ECQB1H273JF3 | 0.027 50V | [M] |
| C497 | ECJ1VB1H122K | 1200P 50V | [M] |
| C498 | ECQV1H334JL3 | 0.33 50V | [M] |
| C499 | F1H1H331A013 | 330P 50V | [M] |
| C501 | ECA1EAM682YE | 6800 25V | [M]GD |
| C501 | ECA1VAM682XE | 6800 35V | [M]GN |
| C502 | ECA1EAK100XB | 10 25V | [M] |
| C507 | F1H1H103A219 | 0.01 50V | [M] |
| C510 | ECA1EAK100XB | 10 25V | [M] |
| C512 | ECQE2104KF3 | 0.1 250V | [M] |
| C514 | F1H1H103A219 | 0.01 50V | [M] |
| C515 | F1H1H103A219 | 0.01 50V | [M] |
| C521 | ECQB1H103JF3 | 0.01 50V | [M] |
| C522 | ECQB1H103JF3 | 0.01 50V | [M] |
| C523 | ECQB1H103JF3 | 0.01 50V | [M] |
| C524 | ECQB1H103JF3 | 0.01 50V | [M] |
| C540 | ECA1CAK220XB | 22 16V | [M] |
| C541 | ECA1CAK220XB | 22 16V | [M] |
| C542 | ECA1EAK100XB | 10 25V | [M] |
| C580 | ECA1VAM101XB | 100 35V | [M] |
| C581 | ECA1CAK220XB | 22 16V | [M] |
| C582 | ECA1HAK010XB | 1 50V | [M] |
| C586 | ECA1HAK100XB | 10 50V | [M] |
| C601 | F1H1H103A219 | 0.01 50V | [M] |
| C603 | ECA1CAM102XB | 1000 16V | [M] |
| C604 | F1H1H103A219 | 0.01 50V | [M] |
| C605 | ECA1EM470B | 47 25V | [M] |
| C609 | ECA1HM101B | 100 50V | [M] |
| C610 | F1H1H103A219 | 0.01 50V | [M] |
| C611 | ECA1HM470B | 47 50V | [M] |
| C612 | ECA1HM101B | 100 50V | [M] |
| C780 | F1H1H101A230 | 100P 50V | [M] |
| C781 | F1H1C104A042 | 0.1 16V | [M] |
| C804 | F1H1H104A783 | 0.1 50V | [M] |
| C805 | ECA1CAK220XB | 22 16V | [M] |
| C810 | F1H1H102A219 | 1000P 50V | [M] |
| C812 | F1H1H102A219 | 1000P 50V | [M] |
| C816 | ECA1CAK100XB | 10 16V | [M] |
| C817 | ECJ1VB1H472K | 4700P 50V | [M] |
| C818 | ECJ1VB1H472K | 4700P 50V | [M] |
| C819 | F1H1C104A042 | 0.1 16V | [M] |
| C820 | ECJ1VB1H472K | 4700P 50V | [M] |
| C821 | ECJ1VB1H472K | 4700P 50V | [M] |
| C822 | ECJ1VB1H472K | 4700P 50V | [M] |
| C823 | ECJ1VB1H472K | 4700P 50V | [M] |

| | | | |
|---|---|---|---|
| [illegible] | [illegible] | [illegible] | [illegible] |

| Ref. No. | Part No. | Part Name & Description | Remarks |
|---|---|---|---|
| C824 | ECJ1VB1H472K | 4700P 50V | [M] |
| C825 | ECJ1VB1H472K | 4700P 50V | [M] |
| C829 | F1H1H470A230 | 47P 50V | [M] |
| C831 | F1H1C104A042 | 0.1 16V | [M] |
| C832 | F1H1C104A042 | 0.1 16V | [M] |
| C833 | ECJ1VC1H180J | 18P 50V | [M] |
| C834 | ECJ1VC1H180J | 18P 50V | [M] |
| C835 | ECJ1VC1H180J | 18P 50V | [M] |
| C836 | ECJ1VC1H220J | 22P 50V | [M] |
| C837 | ECA0JAK101XB | 100 6.3V | [M] |
| C838 | ECA0JAK101XB | 100 6.3V | [M] |
| C839 | ECA0JAM102XB | 1000 6.3V | [M] |
| C840 | ECA0JAM102XB | 1000 6.3V | [M] |
| C843 | F1H1H101A230 | 100P 50V | [M] |
| C844 | ECA1HAK010XB | 1 50V | [M] |
| C845 | F1H1E103A029 | 0.01 25V | [M] |
| C846 | ECA1HAK010XB | 1 50V | [M] |
| C847 | F1H1H102A219 | 1000P 50V | [M] |
| C848 | F1H1H102A219 | 1000P 50V | [M] |
| C849 | F1H1H102A219 | 1000P 50V | [M] |
| C851 | F1H1E103A029 | 0.01 25V | [M] |
| C852 | F1H1H101A230 | 100P 50V | [M] |
| C853 | F1H1H101A230 | 100P 50V | [M] |
| C871 | ECA1CAK100XB | 10 16V | [M] |
| C900 | ECA1HAK2R2XB | 2.2 50V | [M] |
| C901 | ECA1HAK2R2XB | 2.2 50V | [M] |
| C902 | ECA1HAK2R2XB | 2.2 50V | [M] |
| C903 | ECA1HAK2R2XB | 2.2 50V | [M] |
| C904 | ECA1HAK2R2XB | 2.2 50V | [M] |
| C905 | ECA1HAK2R2XB | 2.2 50V | [M] |
| C906 | ECA1HAK2R2XB | 2.2 50V | [M] |
| C907 | ECA1HAK2R2XB | 2.2 50V | [M] |
| C909 | ECA1HAK220XB | 22 50V | [M] |
| C910 | ECA1HAK220XB | 22 50V | [M] |
| C911 | ECA1HAK220XB | 22 50V | [M] |
| C912 | F1H1H104A783 | 0.1 50V | [M] |
| C913 | F1H1H103A219 | 0.01 50V | [M] |
| C914 | F1H1H104A783 | 0.1 50V | [M] |
| C918 | ECA1HAK4R7XB | 4.7 50V | [M] |
| C920 | F1H1H101A230 | 100P 50V | [M] |
| C921 | F1H1H101A230 | 100P 50V | [M] |
| C922 | F2A0J470A013 | 47P 6.3V | [M] |
| C923 | ECA1HAK220XB | 22 50V | [M] |
| C924 | ECA1AAK220XB | 22 10V | [M] |
| C925 | F1H1H221A748 | 220P 50V | [M] |
| C926 | F1H1H221A748 | 220P 50V | [M] |
| C927 | F1H1H221A748 | 220P 50V | [M] |
| C950 | ECA1HAK4R7XB | 4.7 50V | [M] |
| C1101 | ECA1HAK010XB | 1 50V | [M] |
| C1102 | F1H1H471A219 | 470P 50V | [M] |
| C1103 | ECA1CAK101XB | 100 16V | [M] |
| C1104 | F1H1C2730001 | 0.027 16V | [M] |
| C1105 | F1H1H471A219 | 470P 50V | [M] |
| C1106 | ECA1HAK2R2XB | 2.2 50V | [M] |
| C1107 | F1H1H152A219 | 1500P 50V | [M] |
| C1108 | F2A1C1000018 | 10P 16V | [M] |
| C1109 | ECA1HAK3R3XB | 3.3 50V | [M] |

| | | | |
|---|---|---|---|
| [illegible] | [illegible] | [illegible] | [illegible] |

| Ref. No. | Part No. | Part Name & Description | Remarks |
|---|---|---|---|
| C1110 | F1H1H682A219 | 6800P 50V | [M] |
| C1121 | F1H1H102A219 | 1000P 50V | [M] |
| C1122 | F1H1H103A219 | 0.01 50V | [M] |
| C1123 | ECJ1VB1H271K | 270P 50V | [M] |
| C1201 | ECA1HAK010XB | 1 50V | [M] |
| C1202 | F1H1H471A219 | 470P 50V | [M] |
| C1203 | ECA1CAK101XB | 100 16V | [M] |
| C1204 | F1H1C2730001 | 0.027 16V | [M] |
| C1205 | F1H1H471A219 | 470P 50V | [M] |
| C1206 | ECA1HAK2R2XB | 2.2 50V | [M] |
| C1207 | F1H1H152A219 | 1500P 50V | [M] |
| C1208 | F2A1C1000018 | 10P 16V | [M] |
| C1209 | ECA1HAK3R3XB | 3.3 50V | [M] |
| C1210 | F1H1H682A219 | 6800P 50V | [M] |
| C1221 | F1H1H102A219 | 1000P 50V | [M] |
| C1222 | F1H1H103A219 | 0.01 50V | [M] |
| C1223 | ECJ1VB1H271K | 270P 50V | [M] |
| C1301 | ECA1HAK0R1XB | 0.1 50V | [M] |
| C1302 | F1H1C333A071 | 0.033 16V | [M] |
| C1303 | F1H1C333A071 | 0.033 16V | [M] |
| C1304 | ECA1HAK4R7XB | 4.7 50V | [M] |
| C1305 | ECA1CAK330XB | 33 16V | [M] |
| C1307 | ECA1AAK221XQ | 220 10V | [M] |
| C1308 | ECA1CAK220XB | 22 16V | [M] |
| C1310 | ECA1HAK0R1XB | 0.1 50V | [M] |
| C1311 | ECA1CAK470XB | 47 16V | [M] |
| C1312 | F1H1H332A013 | 3300P 50V | [M] |
| C1314 | F1H1H222A013 | 2200P 50V | [M] |
| C1315 | F1H1H222A013 | 2200P 50V | [M] |
| C1316 | F1H1H102A219 | 1000P 50V | [M] |
| C1317 | F1H1H102A219 | 1000P 50V | [M] |
| C1318 | ECQV1H473JL3 | 0.047 50V | [M] |
| C1319 | ECA1CAK101XB | 100 16V | [M] |
| C1320 | ECA1HAK010XB | 1 50V | [M] |
| C1321 | F0A2A472A019 | 4700P 100V | [M] |
| C1323 | ECEA1HKN010B | 1 50V | [M] |
| C1324 | ECA1CAK470XB | 47 16V | [M] |
| C1326 | F2A1C1000018 | 10P 16V | [M] |
| C1371 | F1H1H103A219 | 0.01 50V | [M] |
| C7102 | ECJ1VB1A474K | 0.47 10V | [M] |
| C7107 | ECJ1VB1H223K | 0.022 50V | [M] |
| C7142 | F1H1H332A013 | 3300P 50V | [M] |
| C7154 | F1H1C104A041 | 0.1 16V | [M] |
| C7155 | F1H1C104A041 | 0.1 16V | [M] |
| C7161 | F1H1C104A041 | 0.1 16V | [M] |
| C7164 | ECJ2FF1A106Z | 10 10V | [M] |
| C7165 | ECJ2FF1A106Z | 10 10V | [M] |
| C7166 | F1H1H103A219 | 0.01 50V | [M] |
| C7203 | F2A0J221A200 | 220P 6.3V | [M] |
| C7204 | F1H1C104A041 | 0.1 16V | [M] |
| C7216 | ECJ1VB1H681K | 680P 50V | [M] |
| C7217 | F1H1C104A041 | 0.1 16V | [M] |
| C7218 | ECJ1VB1C823K | 0.082 16V | [M] |
| C7223 | ECEA1HKA4R7I | 4.7 50V | [M] |
| C7225 | F1H1H102A219 | 1000P 50V | [M] |
| C7226 | F1H1H102A219 | 1000P 50V | [M] |
| C7227 | ECA1HAK010XI | 1 50V | [M] |

| Ref. No. | Part No. | Part Name & Description | Remarks |
|---|---|---|---|
| C7228 | ECA1HAK010XI | 1 50V | [M] |
| C7230 | F1H1C104A041 | 0.1 16V | [M] |
| C7231 | F2A0J221A200 | 220P 6.3V | [M] |
| C7232 | F2A0J221A200 | 220P 6.3V | [M] |
| C7233 | F1H1C104A008 | 0.1 16V | [M] |
| C7234 | F1H1C104A041 | 0.1 16V | [M] |
| C7235 | ECEA1CKA100I | 10 16V | [M] |
| C7241 | F1H1H102A219 | 1000P 50V | [M] |
| C7243 | F1H1C104A008 | 0.1 16V | [M] |
| C7244 | ECJ1VB1C153K | 0.015 16V | [M] |
| C7253 | F1H1H471A219 | 470P 50V | [M] |
| C7263 | F1H1C104A041 | 0.1 16V | [M] |
| C7264 | F1H1C104A041 | 0.1 16V | [M] |
| C7315 | ECJ1VB1A474K | 0.47 10V | [M] |
| C7334 | ECEA1AKA221I | 220 10V | [M] |
| C7335 | F1H1C104A008 | 0.1 16V | [M] |
| C7338 | ECJ1VB1C563K | 0.056 16V | [M] |
| C7339 | ECJ1VB1C183K | 0.018 16V | [M] |
| C7352 | ECJ1VB1C183K | 0.018 16V | [M] |
| C7601 | ECEA0JKA330I | 33 6.3V | [M] |
| C7613 | F1H1C104A041 | 0.1 16V | [M] |
| C7614 | F2A0J101A198 | 100P 6.3V | [M] |
| C7626 | F1H1C104A041 | 0.1 16V | [M] |
| C7670 | F1H1C104A041 | 0.1 16V | [M] |

# FLE0602A/J/M/S/P

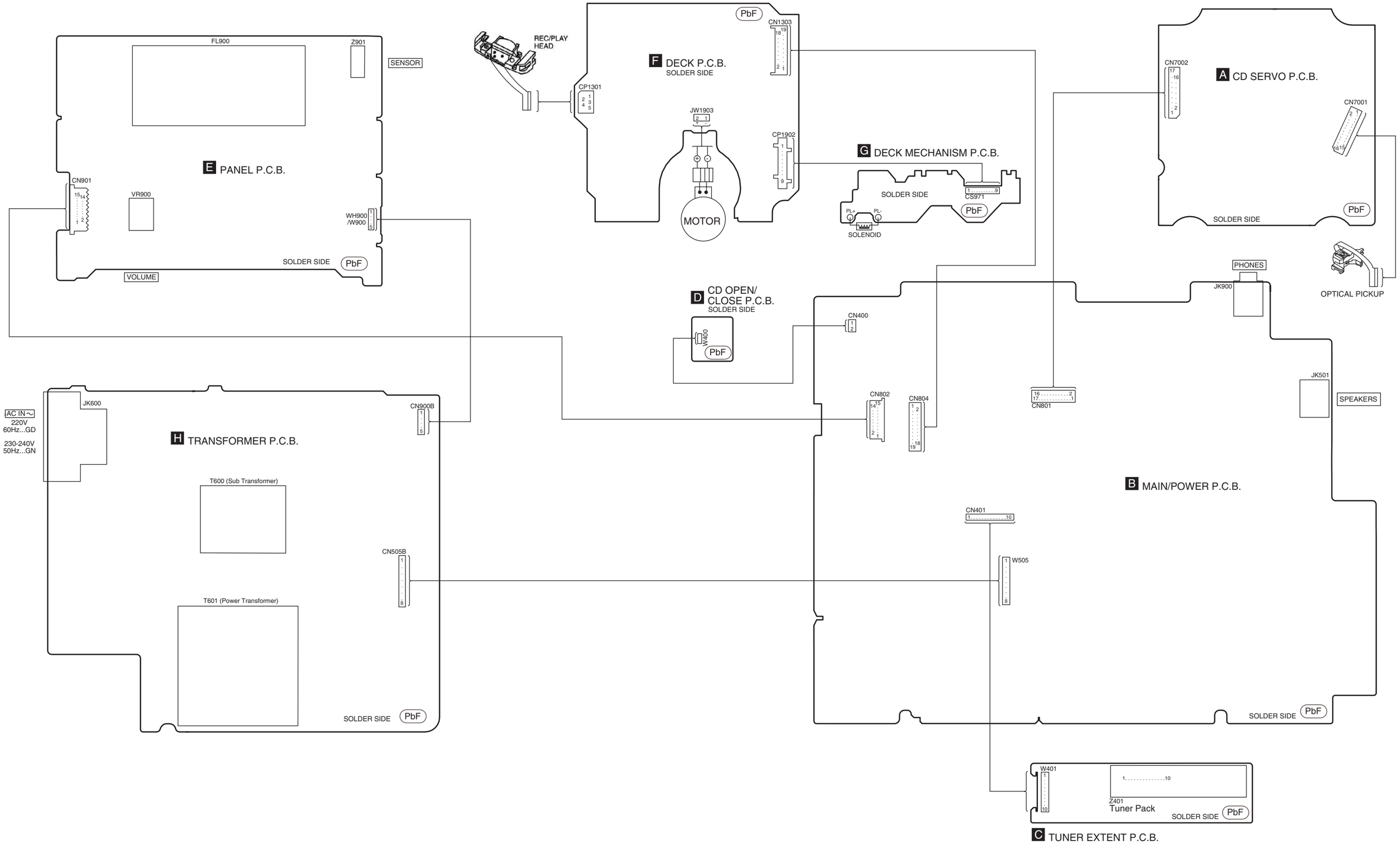
E PANEL P.C.B.
FL900
Z901
SENSOR
CN901
VR900
WH900 /W900
SOLDER SIDE
PbF
VOLUME
REC/PLAY HEAD
F DECK P.C.B.
SOLDER SIDE
CP1301
JW1903
MOTOR
CN1303
CP1902
G DECK MECHANISM P.C.B.
SOLDER SIDE
CS971
PL+
PL-
SOLENOID
A CD SERVO P.C.B.
CN7002
CN7001
SOLDER SIDE
OPTICAL PICKUP
D CD OPEN/ CLOSE P.C.B.
SOLDER SIDE
W400
CN400
PHONES
JK900
JK501
SPEAKERS
CN801
CN802
CN804
B MAIN/POWER P.C.B.
CN401
W505
SOLDER SIDE
AC IN ~
220V
60Hz...GD
230-240V
50Hz...GN
JK600
H TRANSFORMER P.C.B.
CN900B
T600 (Sub Transformer)
CN505B
T601 (Power Transformer)
W401
Z401
Tuner Pack
C TUNER EXTENT P.C.B.

| | | | |
|---|---|---|---|
| 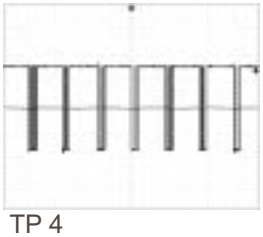 <br>TP 4<br>CD PLAY<br>3.48Vp-p (10msec.div) | 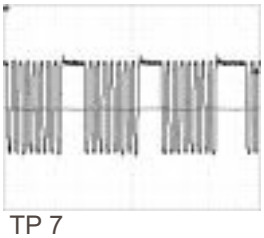 <br>TP 7<br>CD PLAY<br>3.96Vp-p (10usec.div) | 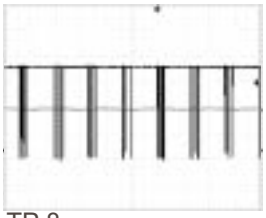 <br>TP 8<br>CD PLAY<br>3.76Vp-p (10msec.div) | 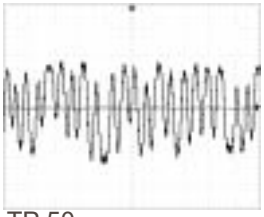 <br>TP 50<br>CD PLAY<br>400mVp-p (5usec.div) |
| 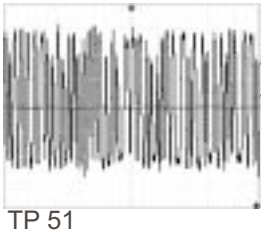 <br>TP 51<br>CD PLAY<br>400mVp-p (10usec.div) | 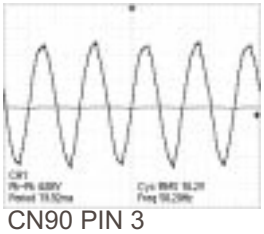 <br>CN90 PIN 3<br>CD PLAY<br>4.88Vp-p (10msec.div) | 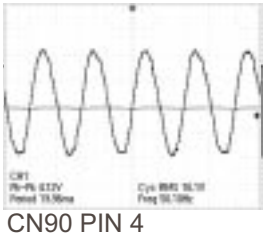 <br>CN90 PIN 4<br>CD PLAY<br>4.12Vp-p (10msec.div) | 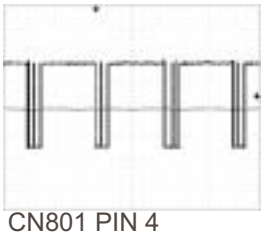 <br>CN801 PIN 4<br>CD PLAY<br>3.48Vp-p (5msec.div) |
| 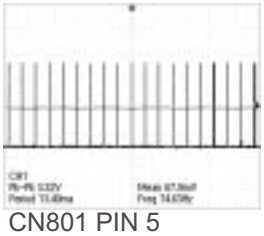 <br>CN801 PIN 5<br>CD PLAY<br>3.32Vp-p (25msec.div) | 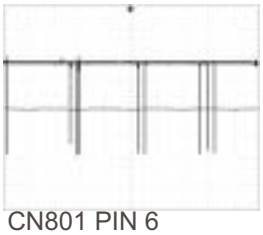 <br>CN801 PIN 6<br>CD PLAY<br>3.8Vp-p (5msec.div) | 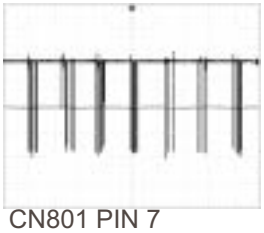 <br>CN801 PIN 7<br>CD PLAY<br>4.16Vp-p (10msec.div) | 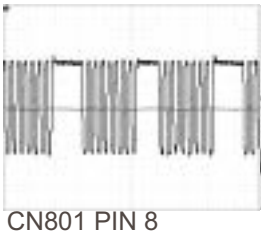 <br>CN801 PIN 8<br>CD PLAY<br>3.92Vp-p (10usec.div) |
| 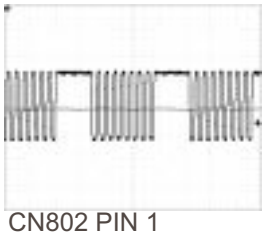 <br>CN802 PIN 1<br>CD PLAY<br>5.44Vp-p (25usec.div) | 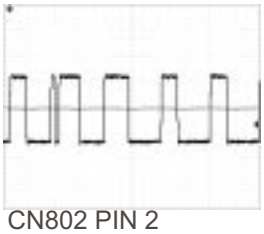 <br>CN802 PIN 2<br>CD PLAY<br>5.52Vp-p (50usec.div) | 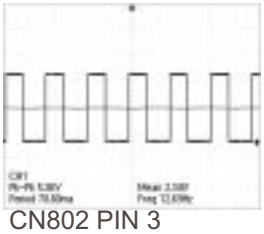 <br>CN802 PIN 3<br>CD PLAY<br>5.36Vp-p (50msec.div) | 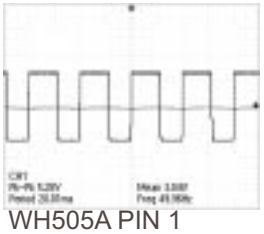 <br>WH505A PIN 1<br>CD PLAY<br>5.28Vp-p (10msec.div) |

| | | | |
|---|---|---|---|
| 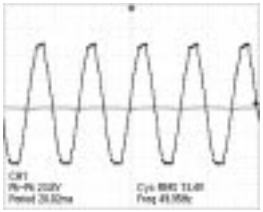 <br>WH505A PIN 7<br>CD PLAY<br>23.8Vp-p (10msec.div) | 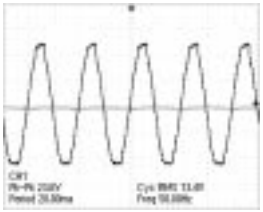 <br>WH505A PIN 8<br>CD PLAY<br>23.6Vp-p (10msec.div) | 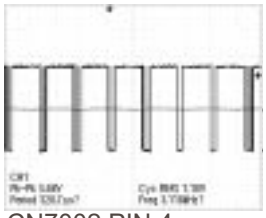 <br>CN7002 PIN 4<br>CD PLAY<br>3.44Vp-p (10msec.div) | 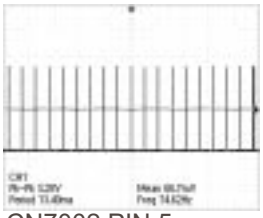 <br>CN7002 PIN 5<br>CD PLAY<br>3.28Vp-p (25msec.div) |
| 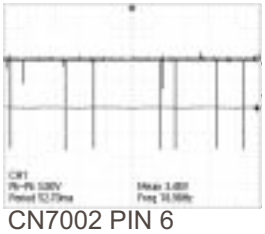 <br>CN7002 PIN 6<br>CD PLAY<br>3.8Vp-p (25msec.div) | 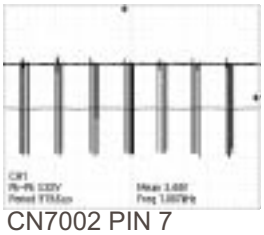 <br>CN7002 PIN 7<br>CD PLAY<br>3.92Vp-p (10msec.div) | 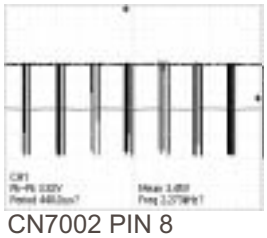 <br>CN7002 PIN 8<br>CD PLAY<br>3.92Vp-p (10msec.div) | 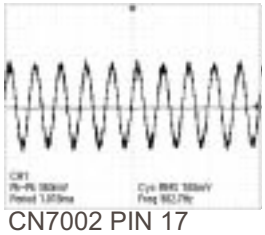 <br>CN7002 PIN 17<br>CD PLAY<br>360mVp-p (1msec.div) |
| 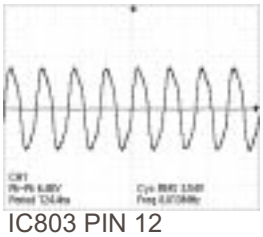 <br>IC803 PIN 12<br>CD PLAY<br>6.48Vp-p (100nsec.div) | 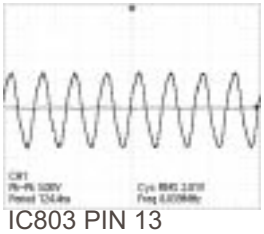 <br>IC803 PIN 13<br>CD PLAY<br>3Vp-p (100nsec.div) | 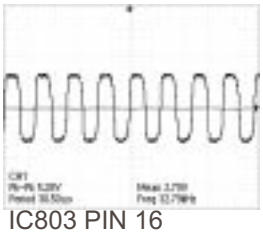 <br>IC803 PIN 16<br>CD PLAY<br>5.28Vp-p (25usec.div) | 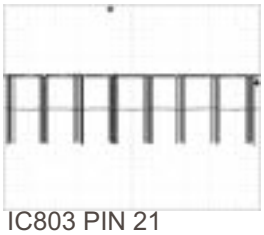 <br>IC803 PIN 21<br>CD PLAY<br>5.6Vp-p (10msec.div) |
| 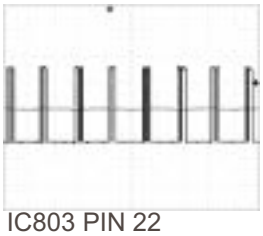 <br>IC803 PIN 22<br>CD PLAY<br>6Vp-p (10msec.div) | 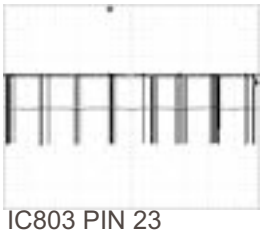 <br>IC803 PIN 23<br>CD PLAY<br>5.68Vp-p (10msec.div) | 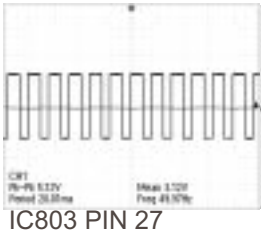 <br>IC803 PIN 27<br>CD PLAY<br>5.12Vp-p (25msec.div) | 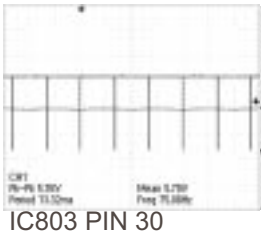 <br>IC803 PIN 30<br>CD PLAY<br>5.76Vp-p (10msec.div) |

| | | | |
|---|---|---|---|
| 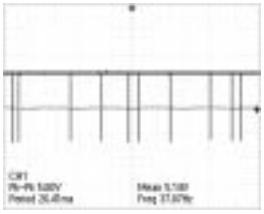 <br>IC803 PIN 36<br>CD PLAY<br>5.6Vp-p (100msec.div) | 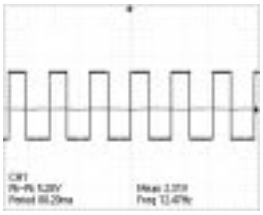 <br>IC803 PIN 40<br>CD PLAY<br>5.28Vp-p (50msec.div) | <br>IC803 PIN 42<br>CD PLAY<br>5.52Vp-p (250usec.div) | 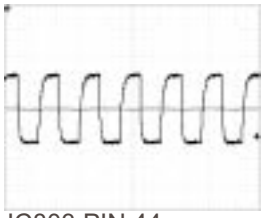 <br>IC803 PIN 44<br>CD PLAY<br>5.52Vp-p (5usec.div) |
| 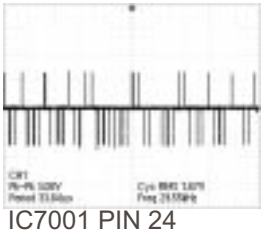 <br>IC7001 PIN 24<br>CD PLAY<br>3.08Vp-p (50usec.div) | 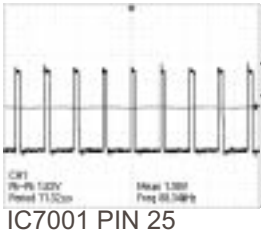 <br>IC7001 PIN 25<br>CD PLAY<br>1.82Vp-p (10usec.div) | 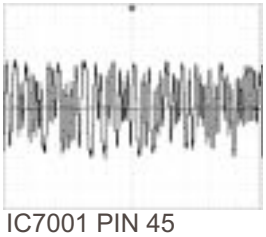 <br>IC7001 PIN 45<br>CD PLAY<br>384mVp-p (10usec.div) | 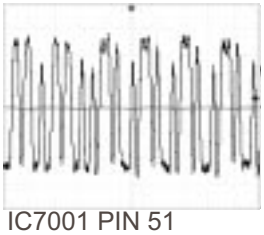 <br>IC7001 PIN 51<br>CD PLAY<br>1.12Vp-p (5usec.div) |
| 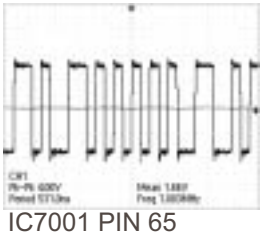 <br>IC7001 PIN 65<br>CD PLAY<br>4Vp-p (500nsec.div) | 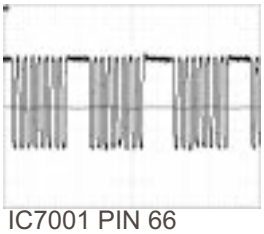 <br>IC7001 PIN 66<br>CD PLAY<br>3.88Vp-p (10usec.div) | 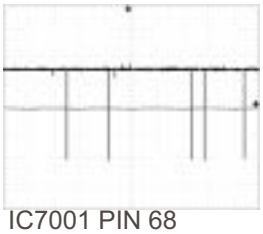 <br>IC7001 PIN 68<br>CD PLAY<br>3.76Vp-p (50msec.div) | 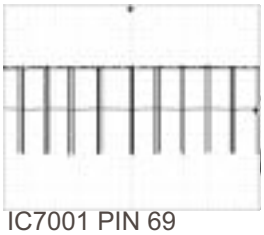 <br>IC7001 PIN 69<br>CD PLAY<br>3.52Vp-p (1msec.div) |
| 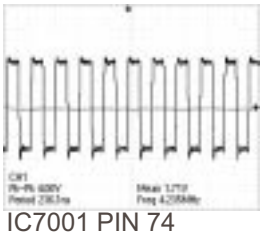 <br>IC7001 PIN 74<br>CD PLAY<br>4Vp-p (250nsec.div) | 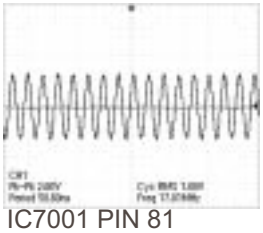 <br>IC7001 PIN 81<br>CD PLAY<br>2.6Vp-p 100nsec.div) | | |

# TRANSFORMER P.C.B.

| Ref No. | Q600 | | | | Q601 | | | | Q602 | | | | Q603 | | | | | | | |
|---|---|---|---|---|---|---|---|---|---|---|---|---|---|---|---|---|---|---|---|---|
| MODE | E | C | B | | E | C | B | | E | C | B | | E | C | B | | | | | |
| CD PLAY | 0 | 0.2 | 0.8 | | 5.9 | 8.4 | 6.6 | | 0 | 3 | 1.5 | | -22.2 | -33.7 | -22.8 | | | | | |
| STANDBY | 0 | 6 | 0 | | 6 | 10 | 0 | | 0 | 3 | 2 | | -20.2 | -20.5 | -20.5 | | | | | |

# PANEL P.C.B.

| Ref No. | IC 900 | | | | | | | | | | | | | | | | | | | |
|---|---|---|---|---|---|---|---|---|---|---|---|---|---|---|---|---|---|---|---|---|
| MODE | 1 | 2 | 3 | 4 | 5 | 6 | 7 | 8 | 9 | 10 | 11 | 12 | 13 | 14 | 15 | 16 | 17 | 18 | 19 | 20 |
| CD PLAY | 0 | 0 | 0 | 0 | 3.3 | 5.7 | 0.1 | 0.2 | 2.5 | 0 | 1.4 | 0 | 5.7 | -21.6 | -21.6 | -17.7 | 0 | -17.6 | -15.5 | -21.5 |
| STANDBY | 0 | 0 | 0 | 0 | 0 | 0 | 0 | 0 | 0 | 0 | 0 | 0 | 0 | 0 | -20.7 | -20.6 | -20.3 | -20.3 | -20.4 | -20.4 |
| Ref No. | IC 900 | | | | | | | | | | | | | | | | | | | |
| MODE | 21 | 22 | 23 | 24 | 25 | 26 | 27 | 28 | 29 | 30 | 31 | 32 | 33 | 34 | 35 | 36 | 37 | 38 | 39 | 40 |
| CD PLAY | -21.5 | -21.5 | -15.6 | -17.7 | -21.5 | -21.5 | -21.5 | -15.6 | -13.3 | -22.2 | -13..7 | -19.7 | -19.7 | -19.7 | -19.7 | -19.7 | -19.7 | -19.7 | -19.7 | -19.7 |
| STANDBY | -20.4 | -20.4 | -20.4 | -20.4 | -20.4 | -20.4 | -20.4 | -20.4 | -20.4 | -20.4 | -20.4 | -20.1 | -20.1 | -20.1 | -20.1 | -20.1 | -20.1 | -20 | -20 | -20 |
| Ref No. | IC 900 | | | | | | | | | | | | | | | | | | | |
| MODE | 41 | 42 | 43 | 44 | | | | | | | | | | | | | | | | |
| CD PLAY | -19.7 | -19.7 | 5.7 | 0 | | | | | | | | | | | | | | | | |
| STANDBY | -19.7 | -19.7 | 0 | 0 | | | | | | | | | | | | | | | | |

# MAIN/POWER P.C.B.

| Ref No. | IC500 | | | | | | | | | | | | | | | | | | | |
|---|---|---|---|---|---|---|---|---|---|---|---|---|---|---|---|---|---|---|---|---|
| MODE | 1 | 2 | 3 | 4 | 5 | 6 | 7 | 8 | 9 | 10 | 11 | 12 | | | | | | | | |
| CD PLAY | 0 | 0 | 27.2 | 0 | 0 | 0 | 11.1 | 0.1 | 0 | 10.1 | 4.7 | 11 | | | | | | | | |
| STANDBY | 3.2 | 0 | 0.5 | 0 | 0 | 0 | 0 | 0 | 0 | 2.7 | 0 | 0 | | | | | | | | |
| Ref No. | IC800 | | | | | | | | | | | | | | | | | | | |
| MODE | 1 | 2 | 3 | 4 | 5 | 6 | 7 | 8 | 9 | 10 | 11 | 12 | 13 | 14 | 15 | 16 | 17 | 18 | 19 | 20 |
| CD PLAY | 4.7 | 0 | 0 | 0 | 0 | 0 | 4.7 | 4.7 | 4.7 | 4.7 | 4.7 | 4.7 | 0 | 0 | 0 | 0 | 0 | 0 | 9.5 | 0.7 |
| STANDBY | 0.4 | 0.4 | 0.4 | 0.4 | 0.4 | 0.4 | 0.4 | 0.4 | 0.4 | 0.4 | 0.4 | 0.4 | 0.4 | 0.4 | 0 | 0 | 0 | 0 | 0.1 | 0.1 |
| Ref No. | IC800 | | | | | | | | | | | | | | | | | | | |
| MODE | 21 | 22 | 23 | 24 | 25 | 26 | 27 | 28 | 29 | 30 | 31 | 32 | | | | | | | | |
| CD PLAY | 4.8 | 0 | 0 | 4.8 | 4.8 | 0 | 4.8 | 4.7 | 4.8 | 4.7 | 4.8 | 4.8 | | | | | | | | |
| STANDBY | 0.2 | 0.2 | 0.2 | 0.2 | 0.2 | 0 | 0 | 0 | 0 | 0 | 0 | 0 | | | | | | | | |
| Ref No. | IC802 | | | | | | | | | | | | | | | | | | | |
| MODE | 1 | 2 | 3 | 4 | 5 | | | | | | | | | | | | | | | |
| CD PLAY | 5.7 | 0 | 0 | 0 | 3.3 | | | | | | | | | | | | | | | |
| STANDBY | 0 | 0 | 0 | 0 | 0.1 | | | | | | | | | | | | | | | |
| Ref No. | IC803 | | | | | | | | | | | | | | | | | | | |
| MODE | 1 | 2 | 3 | 4 | 5 | 6 | 7 | 8 | 9 | 10 | 11 | 12 | 13 | 14 | 15 | 16 | 17 | 18 | 19 | 20 |
| CD PLAY | 0 | 5.2 | 5.2 | 0 | 5.2 | 3.2 | 0.4 | 0 | 0 | 5.2 | 5.2 | 2.6 | 2.6 | 0 | 2.2 | 2.6 | 0 | 0 | 0 | 0.2 |
| STANDBY | 0 | 5.2 | 5.2 | 4 | 5.4 | 0 | 0.4 | 0 | 0 | 5.4 | 0 | 2.7 | 2.6 | 0 | 2.2 | 2.6 | 0 | 0 | 0 | 0 |
| Ref No. | IC803 | | | | | | | | | | | | | | | | | | | |
| MODE | 21 | 22 | 23 | 24 | 25 | 26 | 27 | 28 | 29 | 30 | 31 | 32 | 33 | 34 | 35 | 36 | 37 | 38 | 39 | 40 |
| CD PLAY | 5.0 | 0 | 4.9 | 0 | 5 | 5.2 | 0 | 0 | 5.7 | 5.6 | 1.8 | 1.5 | 5.2 | 0 | 5.1 | 5.1 | 0 | 0 | 0 | 2.6 |
| STANDBY | 0 | 0 | 0 | 0 | 0 | 5.3 | 3.1 | 0 | 0 | 0 | 0.1 | 0.1 | 0.1 | 5.2 | 0 | 0 | 0 | 0 | 0 | 0 |
| Ref No. | IC803 | | | | | | | | | | | | | | | | | | | |
| MODE | 41 | 42 | 43 | 44 | 45 | 46 | 47 | 48 | 49 | 50 | 51 | 52 | 53 | 54 | 55 | 56 | 57 | 58 | 59 | 60 |
| CD PLAY | 1.7 | 0.5 | 0 | 0.3 | 0.1 | 0 | 0.1 | 0 | 0 | 2.6 | 0 | 1.8 | 0 | 0 | 0 | 0 | 0 | 0 | 0 | 0 |
| STANDBY | 0.1 | 0 | 0 | 0 | 0.1 | 0 | 0 | 0 | 0 | 2.7 | 0 | 0.1 | 0 | 0 | 0 | 0 | 0 | 0 | 0 | 0 |
| Ref No. | IC803 | | | | | | | | | | | | | | | | | | | |
| MODE | 61 | 62 | 63 | 64 | 65 | 66 | 67 | 68 | 69 | 70 | 71 | 72 | 73 | 74 | 75 | 76 | 77 | 78 | 79 | 80 |
| CD PLAY | 0 | 0 | 0 | 0 | 0 | 0 | 0 | 0 | 0 | 0 | 5.2 | 0 | 0 | 5.2 | 4.5 | 0 | 0 | 4.8 | 0 | 0 |
| STANDBY | 0 | 0 | 0 | 0 | 0 | 0 | 0 | 0 | 0 | 0 | 0 | 0 | 0 | 5.3 | 4.6 | 0 | 0 | 4.9 | 5.3 | 0 |
| Ref No. | IC803 | | | | | | | | | | | | | | | | | | | |
| MODE | 81 | 82 | 83 | 84 | 85 | 86 | 87 | 88 | 89 | 90 | 91 | 92 | 93 | 94 | 95 | 96 | 97 | 98 | 99 | 100 |
| CD PLAY | 0 | 0 | 0 | 0 | 0 | 0 | 0 | 0 | 0 | 0 | 0 | 5.2 | 1.6 | 1.7 | 0 | 5.2 | 0 | 5.2 | 0 | 5.3 |
| STANDBY | 0 | 0 | 0 | 0 | 0 | 0 | 0 | 0 | 0 | 0 | 0 | 5.3 | 0.1 | 0 | 0 | 5.3 | 0 | 5.2 | 0 | 5.2 |
| Ref No. | IC804 | | | | | | | | | | | | | | | | | | | |
| MODE | 1 | 2 | 3 | 4 | 5 | 6 | 7 | 8 | | | | | | | | | | | | |
| CD PLAY | 0 | 5.2 | 0 | 0 | 0 | 0 | 0 | 0 | | | | | | | | | | | | |
| STANDBY | 0 | 5.2 | 0 | 0 | 0 | 0 | 0 | 0 | | | | | | | | | | | | |
| Ref No. | Q501 | | | | Q502 | | | | Q503 | | | | Q504 | | | | Q505 | | | |
| MODE | E | C | B | | E | C | B | | E | C | B | | E | C | B | | E | C | B | |
| CD PLAY | 4.3 | 23 | 4.9 | | 7.7 | 9.8 | 2.3 | | 23.6 | 9.8 | 22.1 | | 4.3 | 9.8 | 4.9 | | 7.7 | 5.7 | 7 | |
| STANDBY | 2.9 | 2.9 | 3.7 | | 0 | 0 | 0 | | 2.1 | 0.1 | 2.9 | | 2.9 | 0.1 | 0 | | 0 | 0 | 0 | |
| Ref No. | Q506 | | | | Q507 | | | | Q530 | | | | Q750 | | | | Q751 | | | |
| MODE | E | C | B | | E | C | B | | E | C | B | | E | C | B | | E | C | B | |
| CD PLAY | 5 | 7.1 | 5.6 | | 7.7 | 9.9 | 8.3 | | 9 | 9.9 | 9.7 | | 9.8 | 0 | 9.8 | | 0 | 9.8 | 0 | |
| STANDBY | 0 | 0 | 0 | | 0.1 | 0.2 | 0.2 | | 0 | 0.3 | 0.3 | | 0 | 0 | 0 | | 0 | 0 | 0 | |
| Ref No. | Q801 | | | | Q802 | | | | Q803 | | | | Q804 | | | | Q807 | | | |
| MODE | E | C | B | | E | C | B | | E | C | B | | E | C | B | | E | C | B | |
| CD PLAY | 0 | 5.6 | 0 | | 0 | 1.2 | 1.2 | | 0 | 0 | 5.1 | | 0 | 5.2 | 0 | | 0 | 9.8 | 0 | |
| STANDBY | 0 | 0 | 0 | | 0 | 0 | 0 | | 0 | 0.1 | 0 | | 0 | 5.2 | 0 | | 0 | 0.1 | 0 | |
| Ref No. | Q808 | | | | | | | | | | | | | | | | | | | |
| MODE | E | C | B | | | | | | | | | | | | | | | | | |
| CD PLAY | 0 | 9.8 | 0 | | | | | | | | | | | | | | | | | |
| STANDBY | 0 | 0.1 | 0 | | | | | | | | | | | | | | | | | |

# DECK MECHANISM P.C.B.

| Ref No. | IC971 | | | | | | | | | | | | | | | | | | | |
|---|---|---|---|---|---|---|---|---|---|---|---|---|---|---|---|---|---|---|---|---|
| MODE | 1 | 2 | 3 | 4 | | | | | | | | | | | | | | | | |
| CD PLAY | 5.1 | 0 | 1.7 | 0 | | | | | | | | | | | | | | | | |
| STANDBY | 5.2 | 0 | 2.1 | 0 | | | | | | | | | | | | | | | | |

# DECK P.C.B.

| Ref No. | IC1000 | | | | | | | | | | | | | | | | | | | |
|---|---|---|---|---|---|---|---|---|---|---|---|---|---|---|---|---|---|---|---|---|
| MODE | 1 | 2 | 3 | 4 | 5 | | | | | | | | | | | | | | | |
| CD PLAY | 0 | 0 | 0 | 0 | 0 | | | | | | | | | | | | | | | |
| STANDBY | 0 | 0 | 0 | 0 | 0 | | | | | | | | | | | | | | | |
| Ref No. | IC1001 | | | | | | | | | | | | | | | | | | | |
| MODE | 1 | 2 | 3 | 4 | 5 | 6 | 7 | 8 | 9 | 10 | 11 | 12 | 13 | 14 | 15 | 16 | 17 | 18 | 19 | 20 |
| CD PLAY | 0 | 0.3 | 0.3 | 0.1 | 0 | 0 | 0 | 0.1 | 0 | 0 | 0 | 0 | 0 | 0 | 0.1 | 0 | 0 | 0 | 0.1 | 0.3 |
| STANDBY | 0 | 0.3 | 0.3 | 0.1 | 0 | 0 | 0 | 0.1 | 0 | 0 | 0 | 0 | 0 | 0 | 0.1 | 0 | 0 | 0 | 0.1 | 0.3 |
| Ref No. | IC1001 | | | | | | | | | | | | | | | | | | | |
| MODE | 0 | 2 | | | | | | | | | | | | | | | | | | |
| CD PLAY | 0.3 | 0 | | | | | | | | | | | | | | | | | | |
| STANDBY | 0.3 | 0 | | | | | | | | | | | | | | | | | | |
| Ref No. | Q1101 | | | | Q1201 | | | | Q1302 | | | | Q1303 | | | | Q1304 | | | |
| MODE | E | C | B | | E | C | B | | E | C | B | | E | C | B | | E | C | B | |
| CD PLAY | 0 | 0 | 0.7 | | 0 | 0 | 0.7 | | 9.8 | 9.7 | 0 | | 0 | 0 | 0 | | 0 | 0 | 0 | |
| STANDBY | 0 | 0 | 0 | | 0 | 0 | 0 | | 0.3 | 0 | 0 | | 0 | 0 | 0 | | 0 | 0 | 0 | |
| Ref No. | Q1309 | | | | Q1310 | | | | Q1312 | | | | Q1314 | | | | Q1315 | | | |
| MODE | E | C | B | | E | C | B | | E | C | B | | E | C | B | | E | C | B | |
| CD PLAY | 0 | 0 | 0 | | 0 | 0 | 0 | | 0 | 0 | 0 | | 3 | 3 | 0.5 | | 3 | 1.7 | 9.1 | |
| STANDBY | 0 | 0 | 0 | | 0 | 0 | 0 | | 0 | 0 | 0 | | 2.2 | 2.2 | 0.3 | | 2.2 | 2.2 | 1.5 | |
| Ref No. | Q1316 | | | | Q1317 | | | | | | | | | | | | | | | |
| MODE | E | C | B | | E | C | B | | | | | | | | | | | | | |
| CD PLAY | 1.7 | 1.7 | 2.4 | | 0 | 0 | 0 | | | | | | | | | | | | | |
| STANDBY | 2.1 | 2.1 | 2.2 | | 0 | 0 | 0 | | | | | | | | | | | | | |

# CD SERVO P.C.B.

| Ref No. | IC7001 | | | | | | | | | | | | | | | | | | | |
|---|---|---|---|---|---|---|---|---|---|---|---|---|---|---|---|---|---|---|---|---|
| MODE | 1 | 2 | 3 | 4 | 5 | 6 | 7 | 8 | 9 | 10 | 11 | 12 | 13 | 14 | 15 | 16 | 17 | 18 | 19 | 20 |
| CD PLAY | 0 | 0 | 0 | 0 | 0 | 0 | 0 | 0 | 0 | 0 | 0 | 0 | 0 | 0 | 0 | 0 | 0 | 0 | 0 | 3.3 |
| STANDBY | 0 | 0 | 0 | 0 | 0 | 0 | 0 | 0 | 0 | 0 | 0 | 0 | 0 | 0 | 0.1 | 0.1 | 0 | 0 | 0.3 | 0 |

| Ref No. | IC7001 | | | | | | | | | | | | | | | | | | | |
|---|---|---|---|---|---|---|---|---|---|---|---|---|---|---|---|---|---|---|---|---|
| MODE | 21 | 22 | 23 | 24 | 25 | 26 | 27 | 28 | 29 | 30 | 31 | 32 | 33 | 34 | 35 | 36 | 37 | 38 | 39 | 40 |
| CD PLAY | 1.6 | 0 | 1.6 | 1.6 | 1.8 | 0 | 3.3 | 1.5 | 3.3 | 3.3 | 0 | 1.0 | 0 | 1.6 | 2.1 | 2.1 | 1.8 | 1.8 | 1.8 | 1.8 |
| STANDBY | 0 | 0 | 0 | 0 | 0 | 0 | 0 | 0 | 0 | 0 | 0 | 0 | 0 | 0 | 0.1 | 0 | 0 | 0 | 0 | 0 |

| Ref No. | IC7001 | | | | | | | | | | | | | | | | | | | |
|---|---|---|---|---|---|---|---|---|---|---|---|---|---|---|---|---|---|---|---|---|
| MODE | 41 | 42 | 43 | 44 | 45 | 46 | 47 | 48 | 49 | 50 | 51 | 52 | 53 | 54 | 55 | 56 | 57 | 58 | 59 | 60 |
| CD PLAY | 0.2 | 2.4 | 1.9 | 1.7 | 1.1 | 1.1 | 3.3 | 1.1 | 1.2 | 1.3 | 1.7 | 1.7 | 0.8 | 1.5 | 1.4 | 1.5 | 0 | 3.0 | 1.5 | 0 |
| STANDBY | 0 | 0 | 0 | 0 | 0.2 | 0 | 0 | 0 | 0 | 0 | 0 | 0 | 0.2 | 0 | 0 | 0 | 0 | 0.2 | 0 | 0 |

| Ref No. | IC7001 | | | | | | | | | | | | | | | | | | | |
|---|---|---|---|---|---|---|---|---|---|---|---|---|---|---|---|---|---|---|---|---|
| MODE | 61 | 62 | 63 | 64 | 65 | 66 | 67 | 68 | 69 | 70 | 71 | 72 | 73 | 74 | 75 | 76 | 77 | 78 | 79 | 80 |
| CD PLAY | 3.3 | 0 | 0 | 0 | 0 | 0 | 3.4 | 3.4 | 3.5 | 0 | 0 | 3.5 | 0 | 1.6 | 0 | 1.5 | 3.3 | 0 | 3.3 | 1.6 |
| STANDBY | 0.1 | 0 | 0 | 0 | 0.1 | 0.1 | 0 | 0 | 0 | 0 | 0 | 0 | 0 | 0 | 0 | 0 | 0.2 | 0 | 0.2 | 0.1 |

| Ref No. | IC7001 | | | | | | | | | | | | | | | | | | | |
|---|---|---|---|---|---|---|---|---|---|---|---|---|---|---|---|---|---|---|---|---|
| MODE | 81 | 82 | 83 | 84 | 85 | 86 | 87 | 88 | 89 | 90 | 91 | 92 | 93 | 94 | 95 | 96 | 97 | 98 | 99 | 100 |
| CD PLAY | 0 | 3.3 | 0 | 0 | 0 | 0 | 0 | 0 | 0 | 0 | 0 | 0 | 2.3 | 0 | 0 | 0 | 0 | 0 | 0 | 0 |
| STANDBY | 0.1 | 0.2 | 0 | 0 | 0 | 0 | 0 | 0 | 0 | 0 | 0 | 0 | 0 | 0 | 0 | 0 | 0 | 0 | 0 | 0 |

| Ref No. | IC7002 | | | | | | | | | | | | | | | | | | | |
|---|---|---|---|---|---|---|---|---|---|---|---|---|---|---|---|---|---|---|---|---|
| MODE | 1 | 2 | 3 | 4 | 5 | 6 | 7 | 8 | 9 | 10 | 11 | 12 | 13 | 14 | 15 | 16 | 17 | 18 | 19 | 20 |
| CD PLAY | 1.6 | 0 | 1.6 | 0 | 0 | 0 | 0 | 0 | 0 | 7.6 | 4.3 | 3.6 | 3.7 | 3.6 | 3 | 4.1 | 3.8 | 3.5 | 7.7 | 0 |
| STANDBY | 0 | 0 | 0 | 0 | 0 | 0 | 0 | 0 | 0 | 0 | 0 | 0 | 0 | 0 | 0 | 0 | 0 | 0 | 0 | 0 |

| Ref No. | IC 7002 | | | | | | | | | | | | | | | | | | | |
|---|---|---|---|---|---|---|---|---|---|---|---|---|---|---|---|---|---|---|---|---|
| MODE | 21 | 22 | 23 | 24 | 25 | 26 | 27 | 28 | | | | | | | | | | | | |
| CD PLAY | 7.7 | 0 | 0 | 0 | 7.7 | 1.6 | 1.6 | 1.6 | | | | | | | | | | | | |
| STANDBY | 0 | 0 | 0 | 0 | 0 | 0 | 0 | 0 | | | | | | | | | | | | |

| Ref No. | | Q7601 | | | | | | | | | | | | | | | | | | |
|---|---|---|---|---|---|---|---|---|---|---|---|---|---|---|---|---|---|---|---|---|
| MODE | E | C | B | | | | | | | | | | | | | | | | | |
| CD PLAY | 3.1 | 2 | 2.4 | | | | | | | | | | | | | | | | | |
| STANDBY | 0.2 | 0.3 | 0.2 | | | | | | | | | | | | | | | | | |

SCHEMATIC DIAGRAM - 6

# F DECK CIRCUIT

: +B SIGNAL LINE

TAPE PLAYBACK SIGNAL LINE

TAPE RECORD SIGNAL LINE

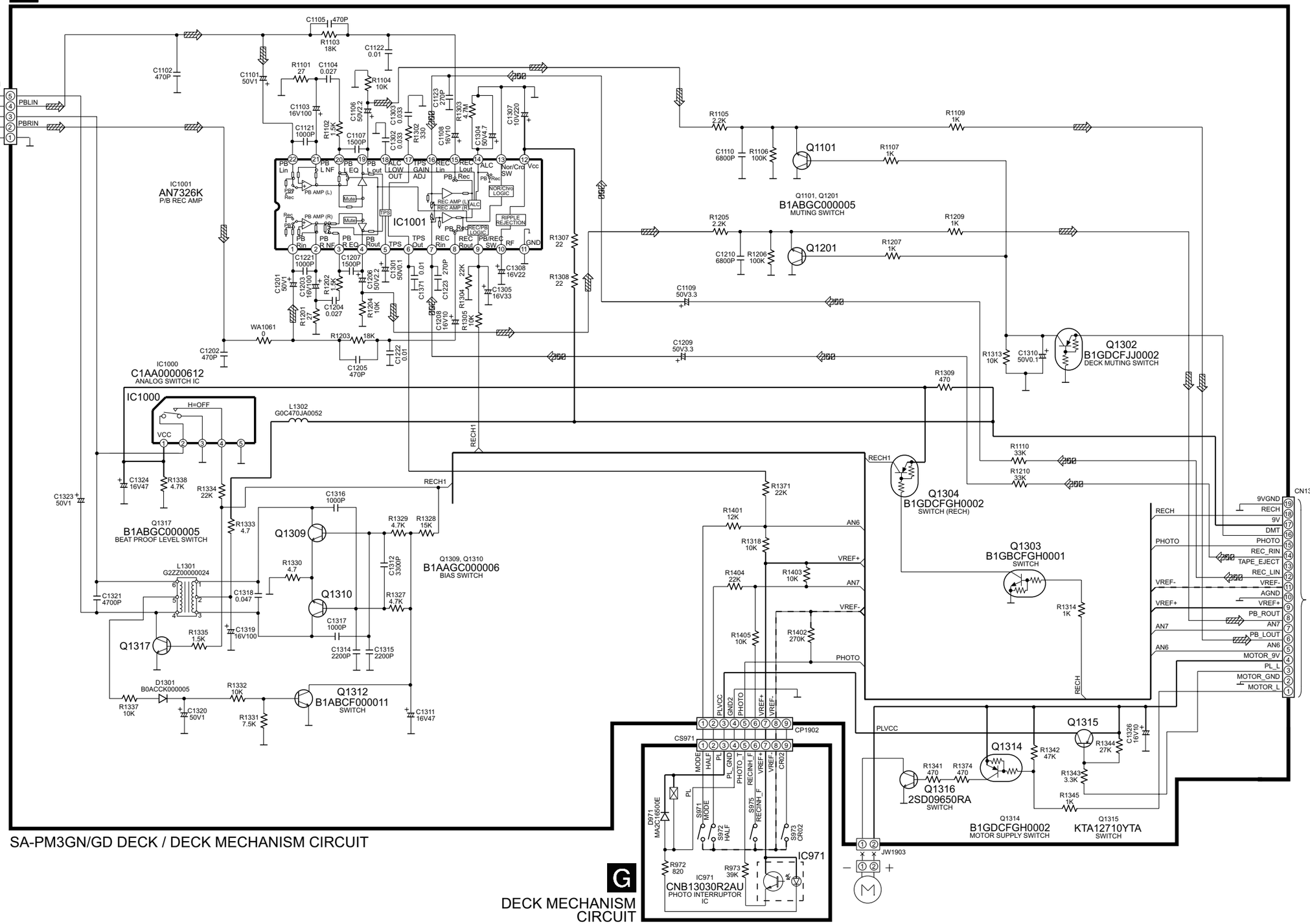


SA-PM3GN/GD DECK / DECK MECHANISM CIRCUIT

G DECK MECHANISM CIRCUIT

## E PANEL CIRCUIT

—— : -B SIGNAL LINE
—— : +B SIGNAL LINE

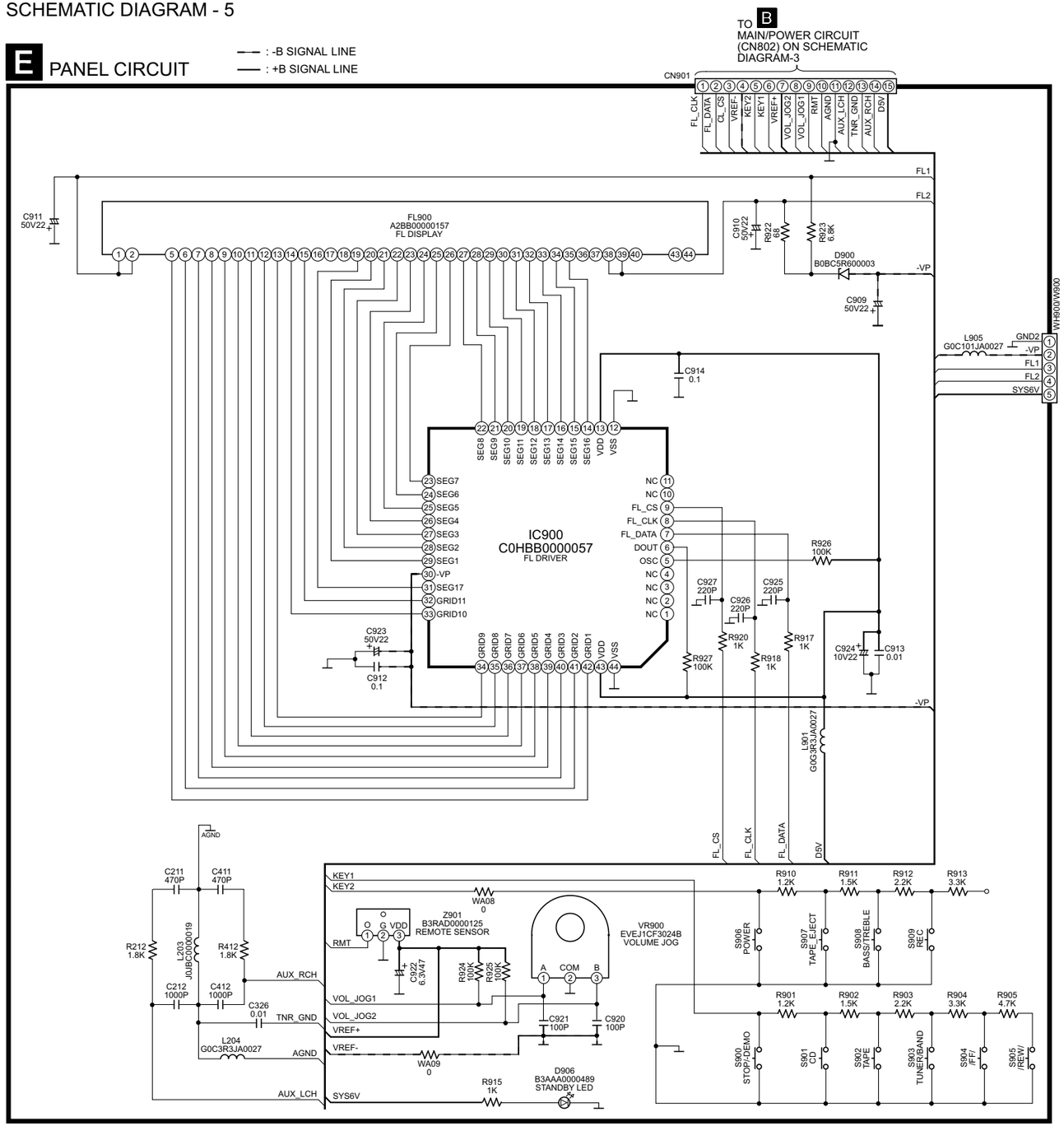


## H TRANSFORMER CIRCUIT

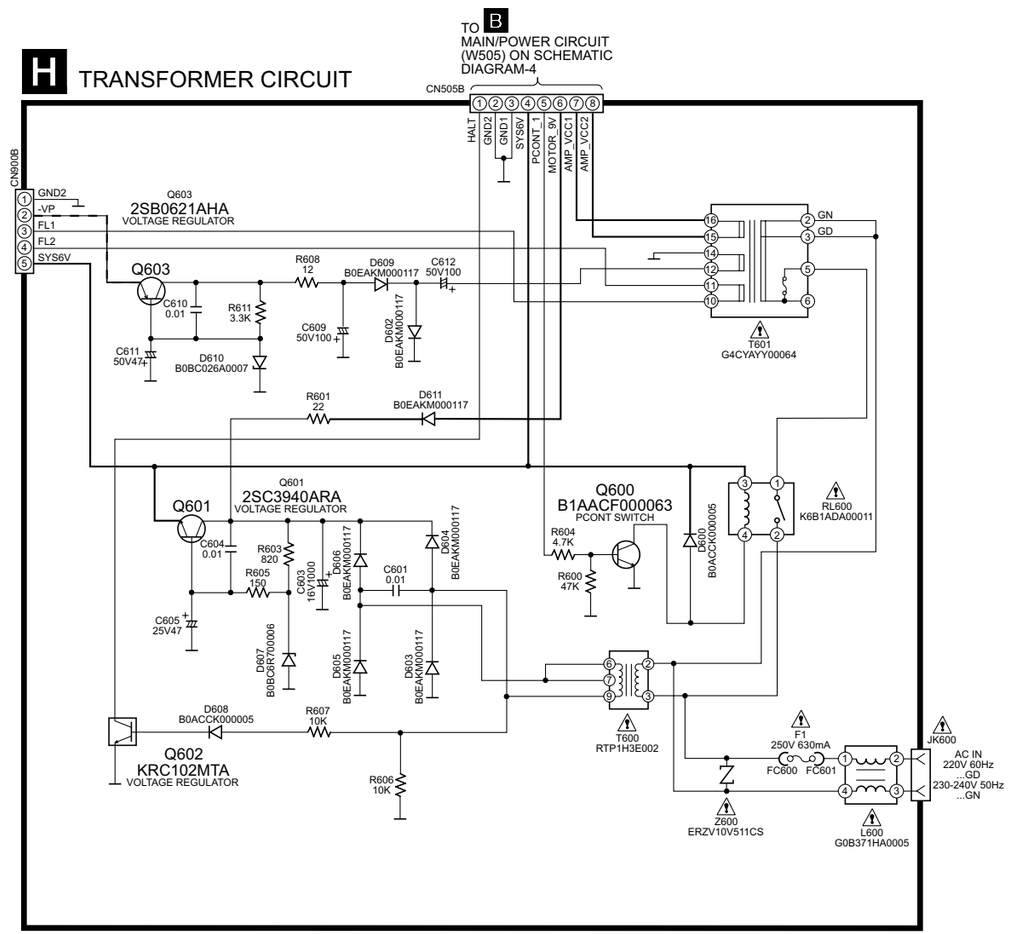


SA-PM3GN/GD PANEL / TRANSFORMER CIRCUIT

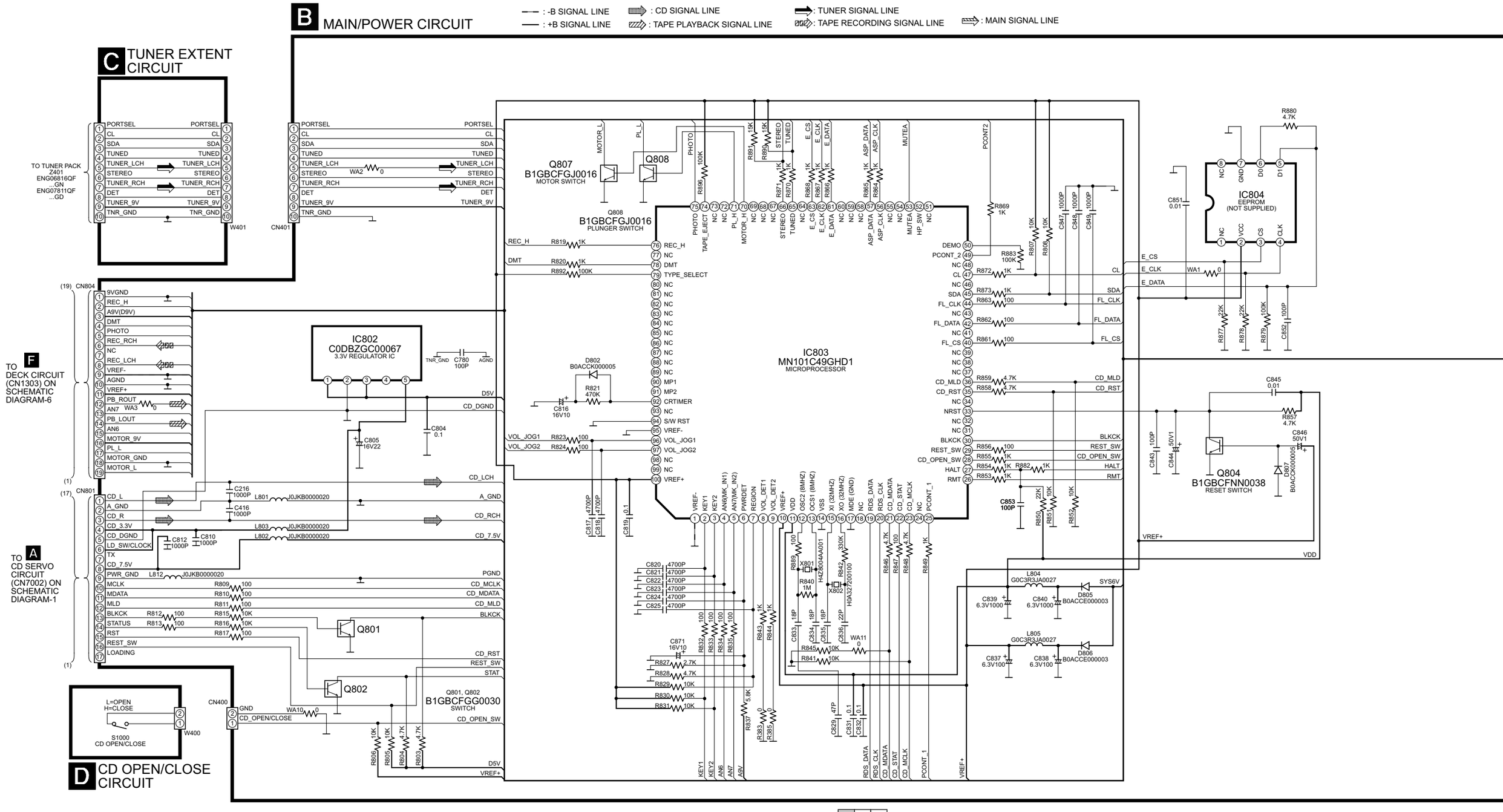


SA-PM3GN/GD MAIN/POWER / TUNER EXTENT / CD OPEN/CLOSE CIRCUIT

## B MAIN/POWER CIRCUIT

—— : -B SIGNAL LINE
—— : +B SIGNAL LINE
: CD SIGNAL LINE
: TAPE PLAYBACK SIGNAL LINE
: TUNER SIGNAL LINE
: TAPE RECORDING SIGNAL LINE
: MAIN SIGNAL LINE

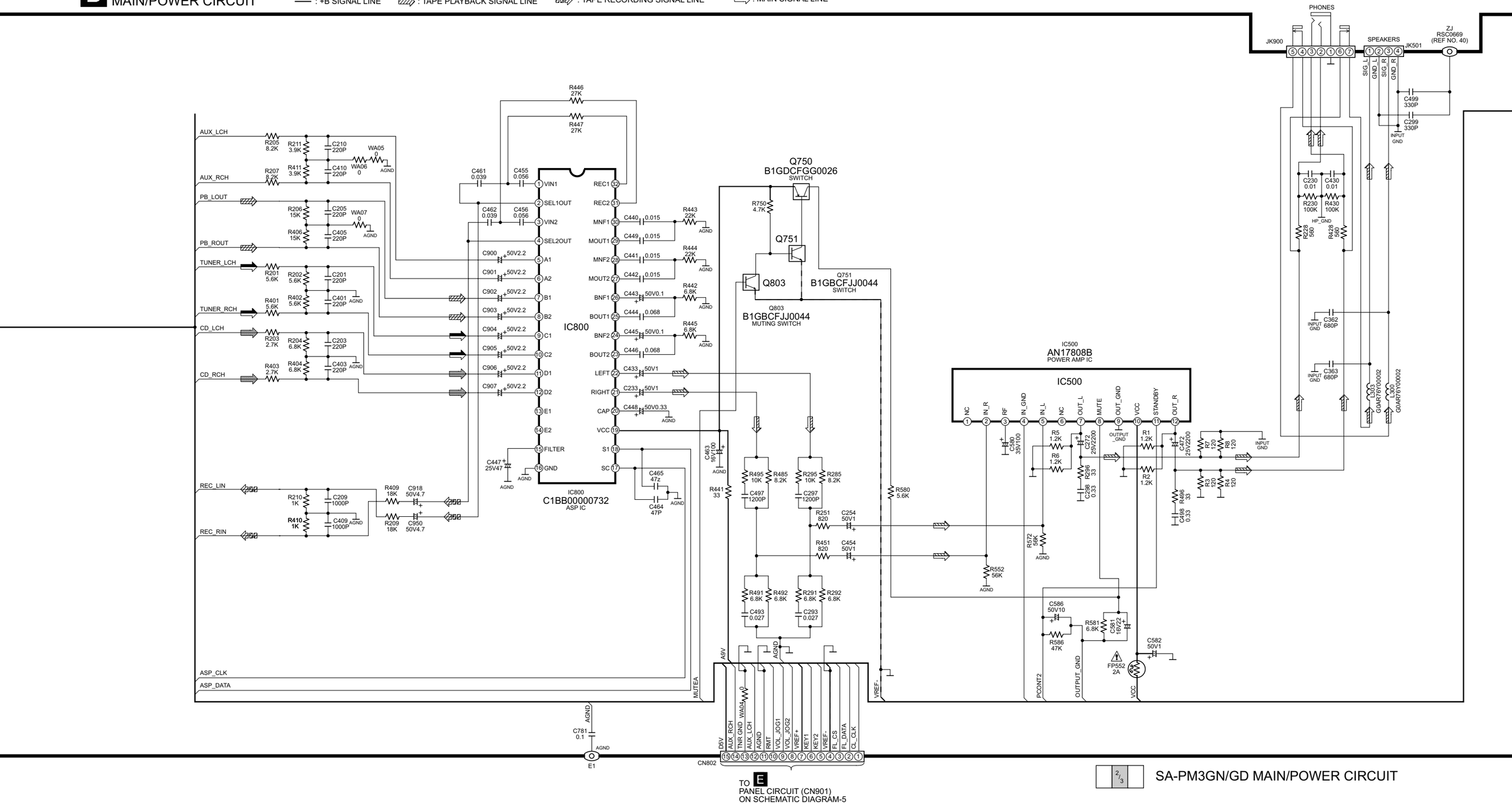

## B MAIN/POWER CIRCUIT

—·— : -B SIGNAL
—— : +B SIGNAL LINE

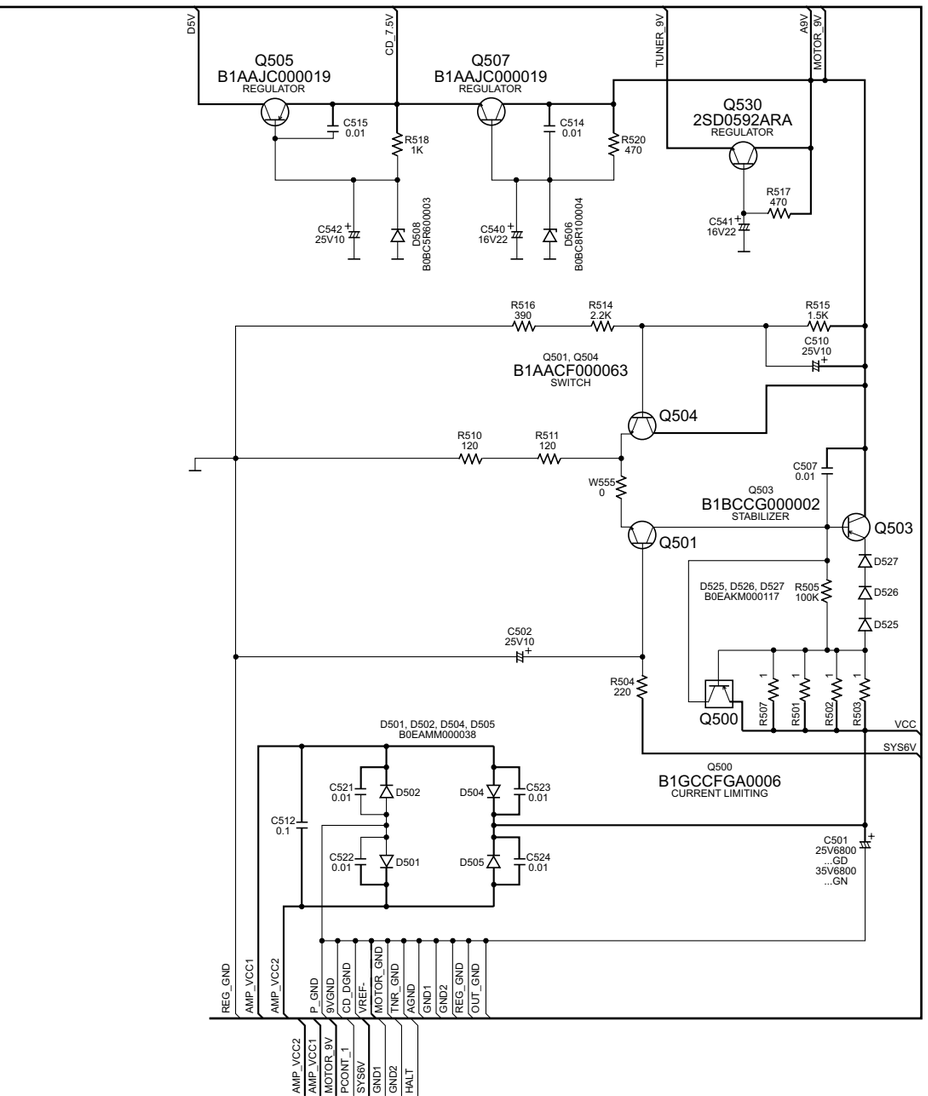


TO H
TRANSFORMER CIRCUIT
(CN505B) ON SCHEMATIC
DIAGRAM-5

3/3 SA-PM3GN/GD MAIN/POWER CIRCUIT

SCHEMATIC DIAGRAM - 1

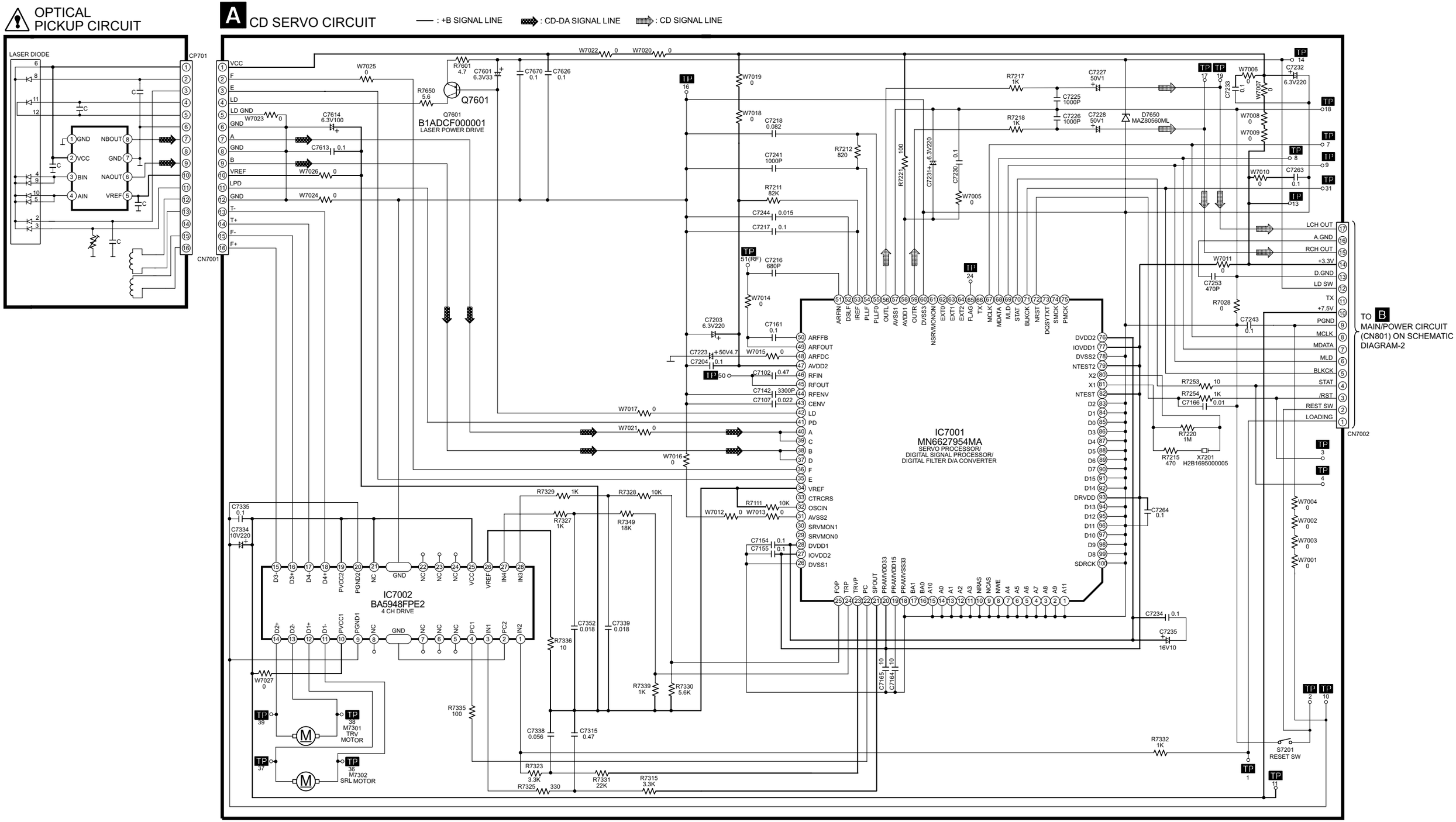


SA-PM3GN/GD CD SERVO CIRCUIT

## H TRANSFORMER P.C.B (REPV0088B...GN)
## (REPV0088D...GD)

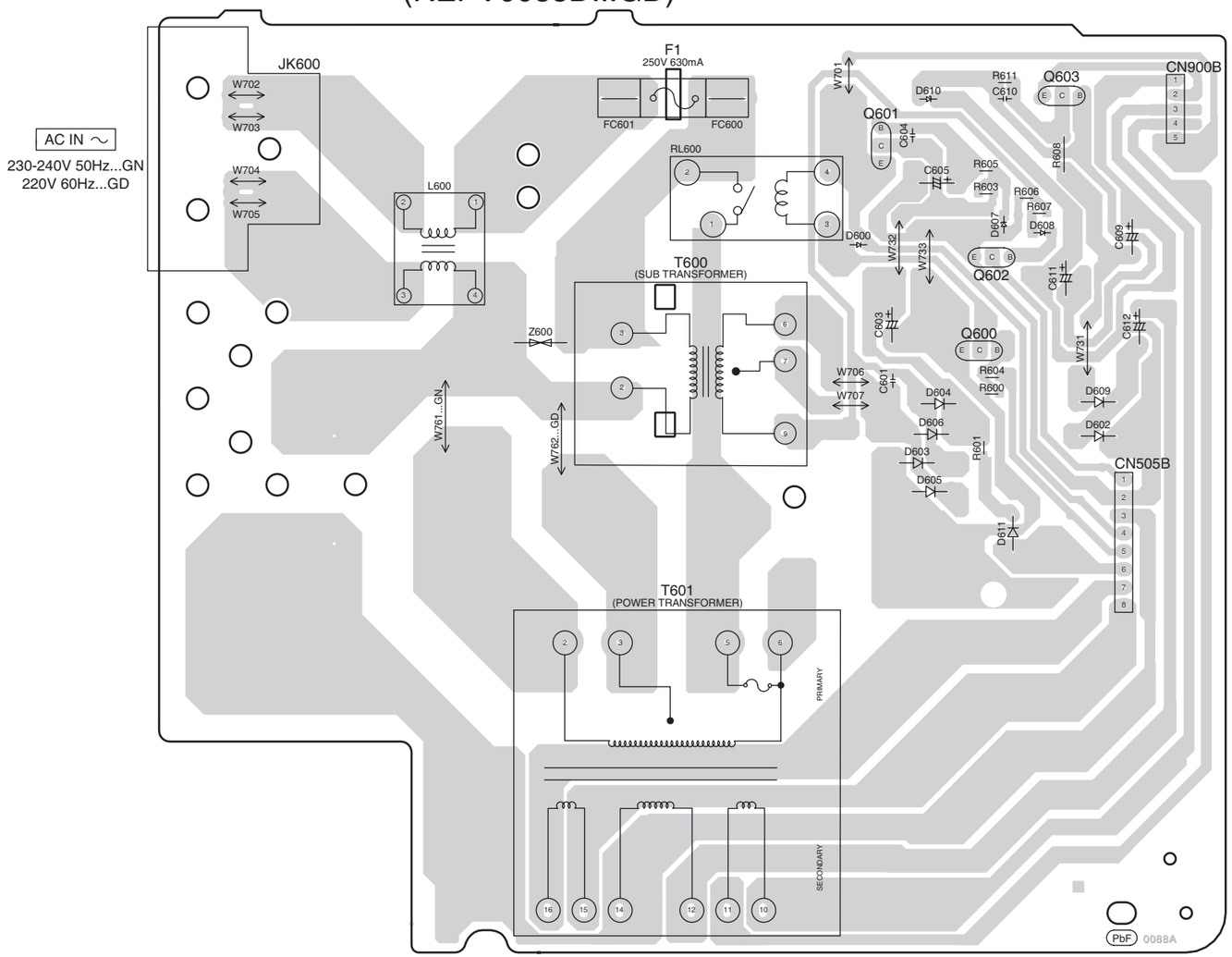

## A CD SERVO P.C.B (REPV0082A)

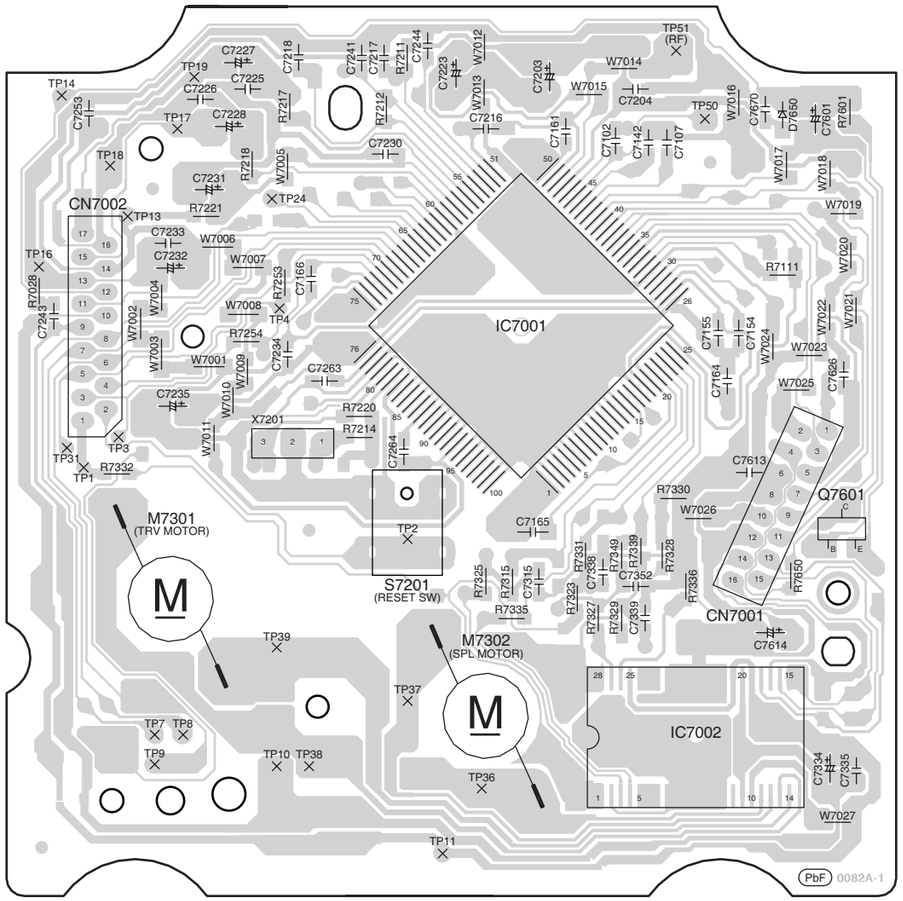

## E PANEL P.C.B (REPV0088B...GN) (REPV0088D...GD)

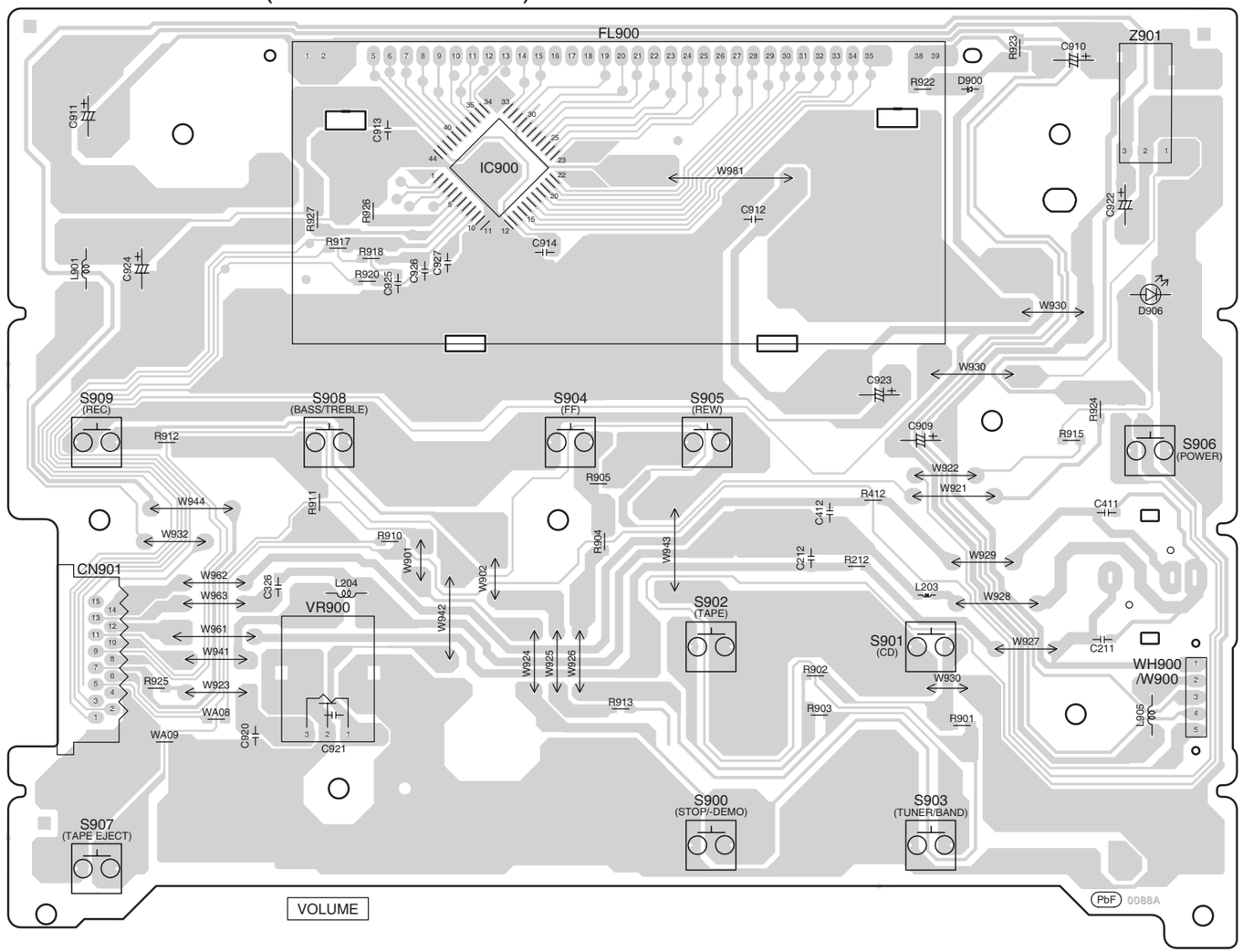


## C TUNER EXTENT P.C.B (REPV0088B...GN) (REPV0088D...GD)

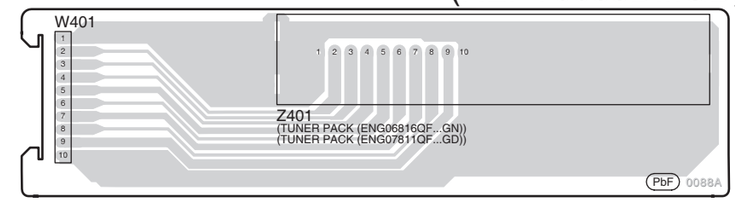


## D CD OPEN/CLOSE P.C.B (REPV0088B...GN) (REPV0088D...GD)

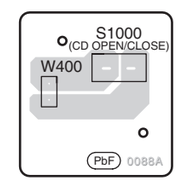

## B MAIN/POWER P.C.B (REPV0088B...GN)
(REPV0088D...GD)

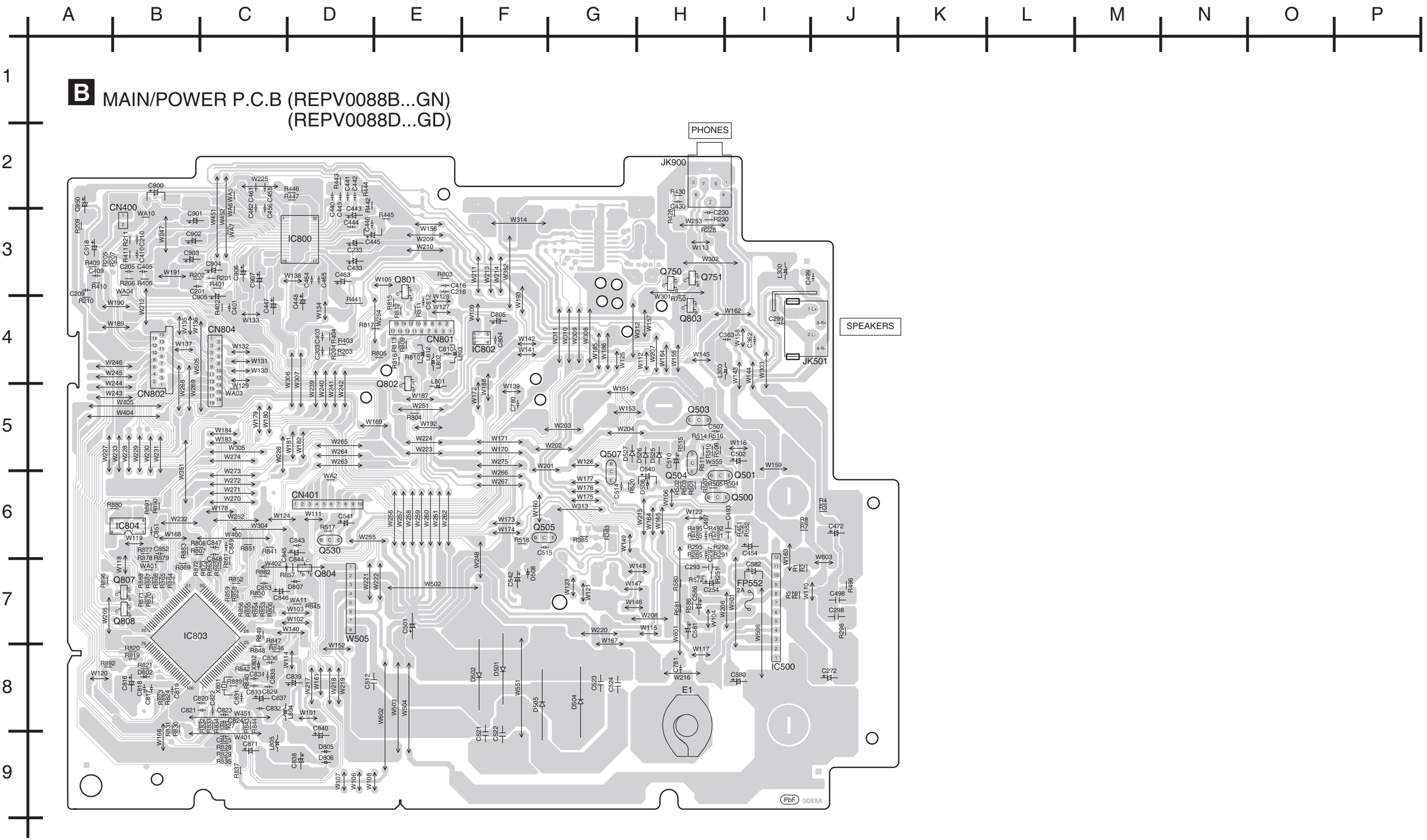

## F DECK P.C.B (REPV0092A)

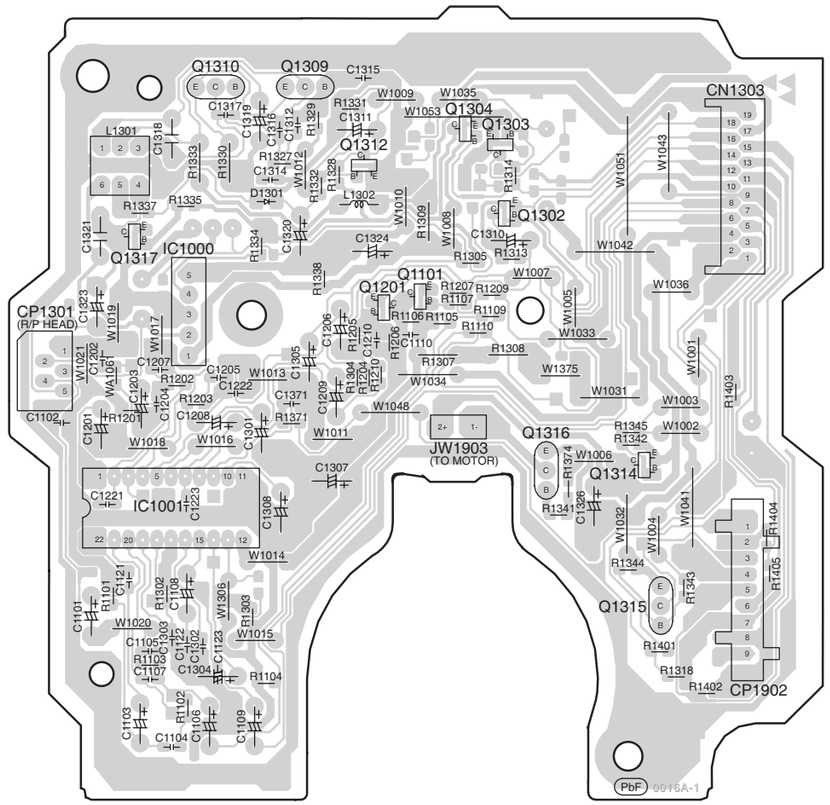


## G DECK MECHANISM P.C.B (REPX0321H)

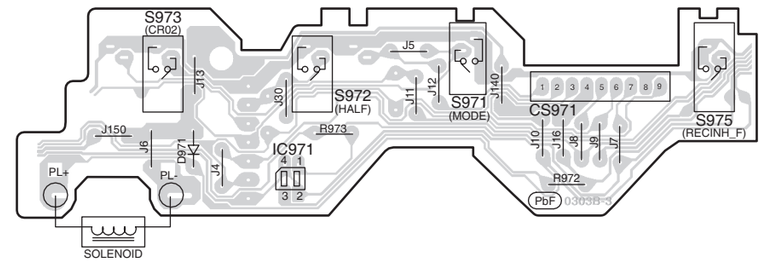

## Main unit

Top of unit

**Headphone jack (PHONES)**
Avoid listening for prolonged periods of time to prevent hearing damage.
Plug type: 3.5 mm stereo (not included)

**Disc lid**

**Disc lid open/close**

**Remote control sensor**

**AC supply indicator (AC IN)**
This indicator lights when the unit is connected to the AC mains supply.

**❶ Standby/on switch (⏻/I)**
Press to switch the unit from on to standby mode or vice versa. In standby mode, the unit is still consuming a small amount of power.

**❷ Disc play/pause**

**❸ Tape play**

**❹ Tuner/Band selection**

**Cassette lid**

**Display panel**

**❺ Bass/Treble selection**

**Recording start/pause**

**Disc skip/search, tape fast-forward/rewind, tune/preset channel selection, time adjustment, bass/treble adjustment**

**❻ Volume control**

**Cassette lid open**

**Stop/Demo**

## Remote control

Buttons such as ❶ function the same as the controls on the main unit.

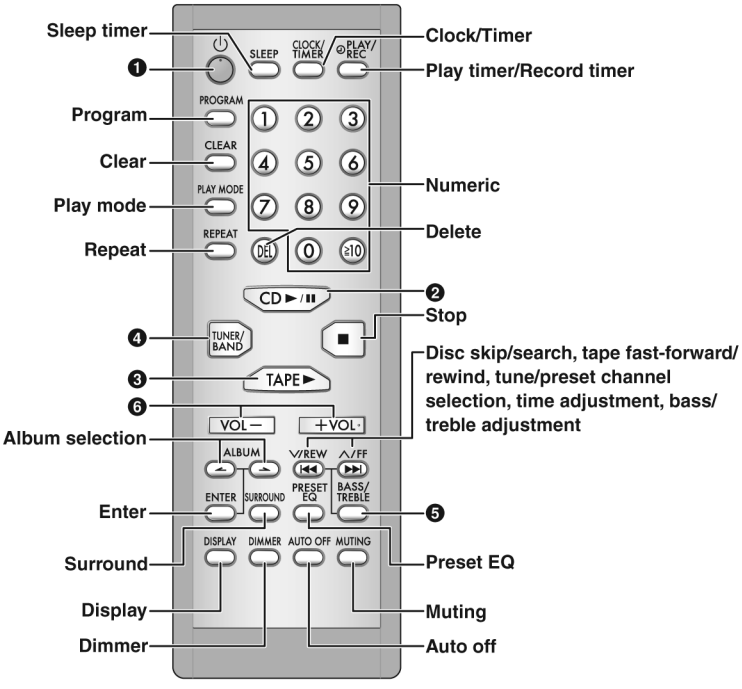

This function allows you to turn off the unit in **disc or tape** mode only after left unused for 10 minutes.

The setting is maintained even if the unit is turned off.

Dims the display panel.

Mutes the sound.

- Press the button to activate.
- Press again to cancel.

**Note**

- This unit can play MP3 files and CD-DA format audio CD-R/RWs that have been finalized.
- It may not be able to play some CD-R/RWs depending on the condition of the recording.
- Do not use irregularly shaped discs.
- Do not use discs with labels and stickers that are coming off or with adhesive exuding from under labels and stickers.
- Do not attach extra labels or stickers on the disc.
- Do not write anything on the disc.

**CD**

- This unit can access up to 99 tracks.
- Choose a CD with this mark:

COMPACT disc DIGITAL AUDIO

## Using DualDiscs

The "CD" sides of DualDiscs do not meet the CD-DA standard so it may not be possible to play them on this unit.

**MP3**

- Files are treated as tracks and folders are treated as albums.
- This unit can access up to 999 tracks, 255 albums and 20 sessions.
- Disc must conform to ISO9660 level 1 or 2 (except for extended formats).
- To play in a certain order, prefix the folder and file names with the 3-digit numbers in the order you want to play them.

MPEG Layer-3 audio decoding technology licensed from Fraunhofer IIS and Thomson multimedia.

BA5948FPE2 (28P)
AN7326K (22P)

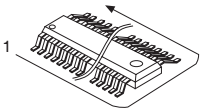


AN17808B

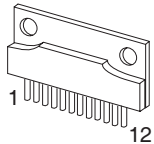


C1BB00000732 (32P)

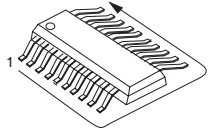


MN6627954MA(100P)
MN101C49GHD1(100P)
C0HBB0000057(44P)

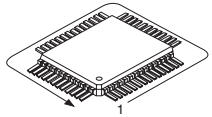


C0DBZGC00067

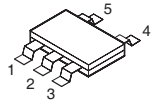


CNB13030R2AU

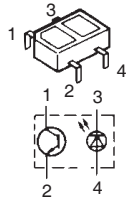


C1AA00000612

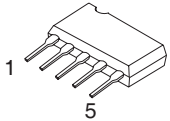


KRC102MTA
B1GCCFGA0006

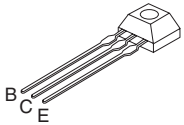


B1BCCG000002

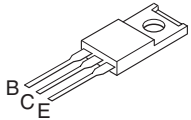


2SC3940ARA

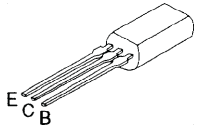


B1ABGC000005
B1GBCFGH0001
B1GDCFGH0002
B1ABCF000011
B1GDCFJJ0002
B1GBCFNN0038
B1GBCFGG0030
B1GBCFGJ0016

B1GBCFJJ0044
B1ADCF000001

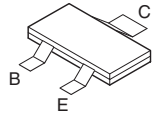


B1AACF000063

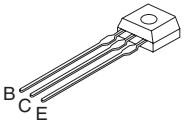


B1AAGC000006

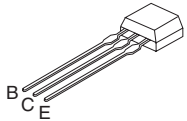


2SD0592ARA
2SD09650RA
B1ACKD000006
B1AAJC000019

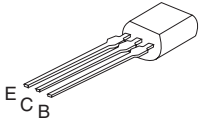


B1GDCFGG0026

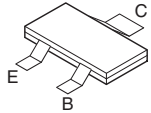


2SB0621AHA

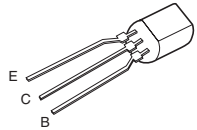


MA2C16500E

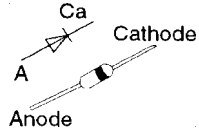


B0ACCE000003

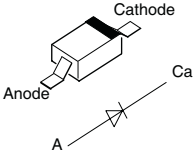


B0EAKM000117
B0EAMM000038

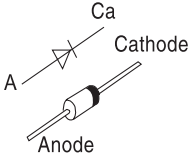


B3AAA0000489

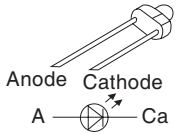


B0BC5R600003

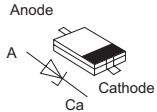


MAZ80560ML
B0BC8R100004
B0BC026A0007
B0BC6R700006

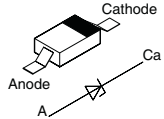


B0ACCK000005

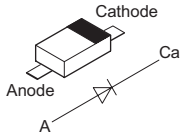

SIGNAL LINES

: MAIN SIGNAL LINE
CD SIGNAL LINE
: TAPE PLAYBACK SIGNAL LINE
: FM/AM SIGNAL LINE
: TAPE RECORD SIGNAL LINE

( ) Indicates Pin No. of Right Channel
Note : Signal Lines are applicable to the Left Channel only.

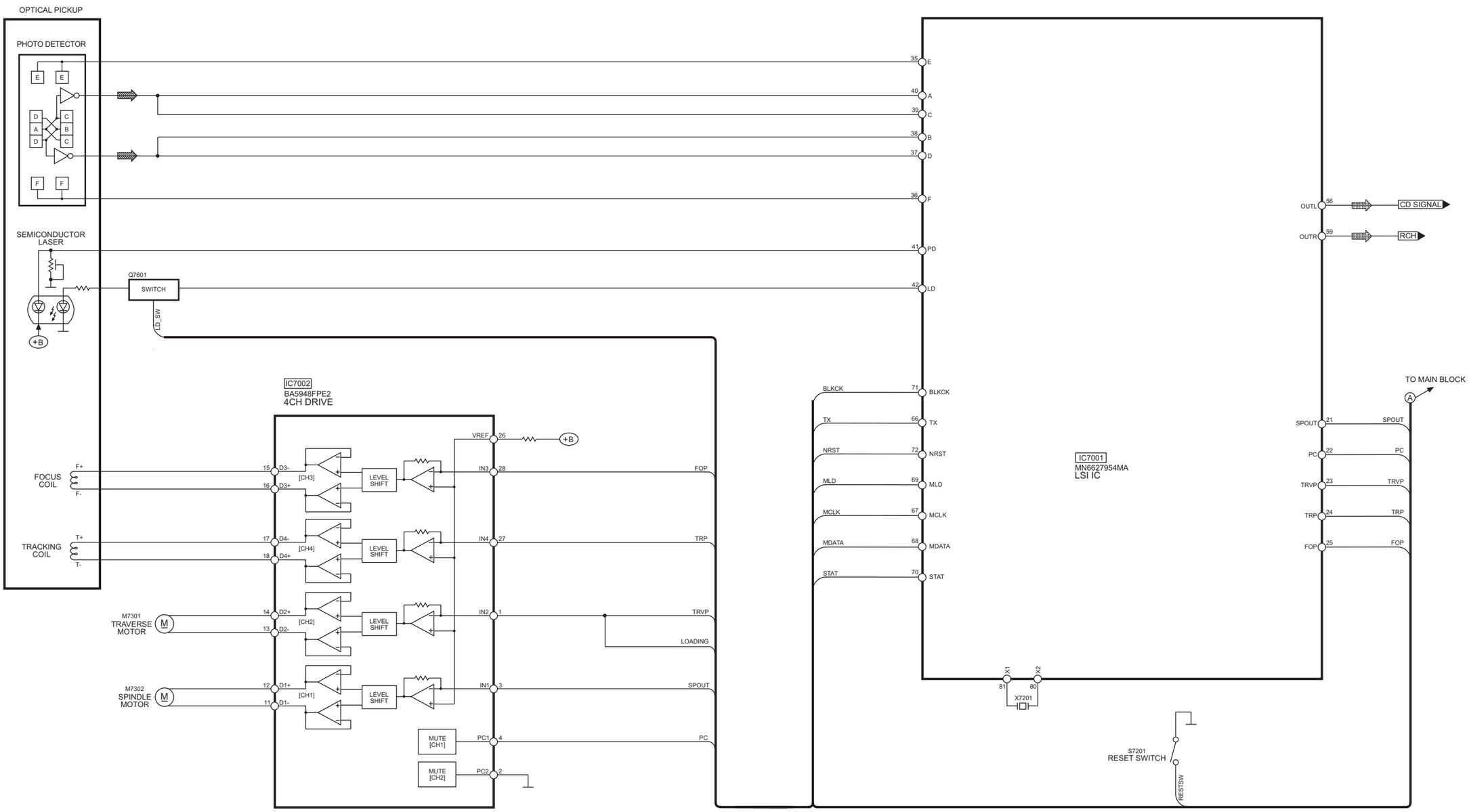

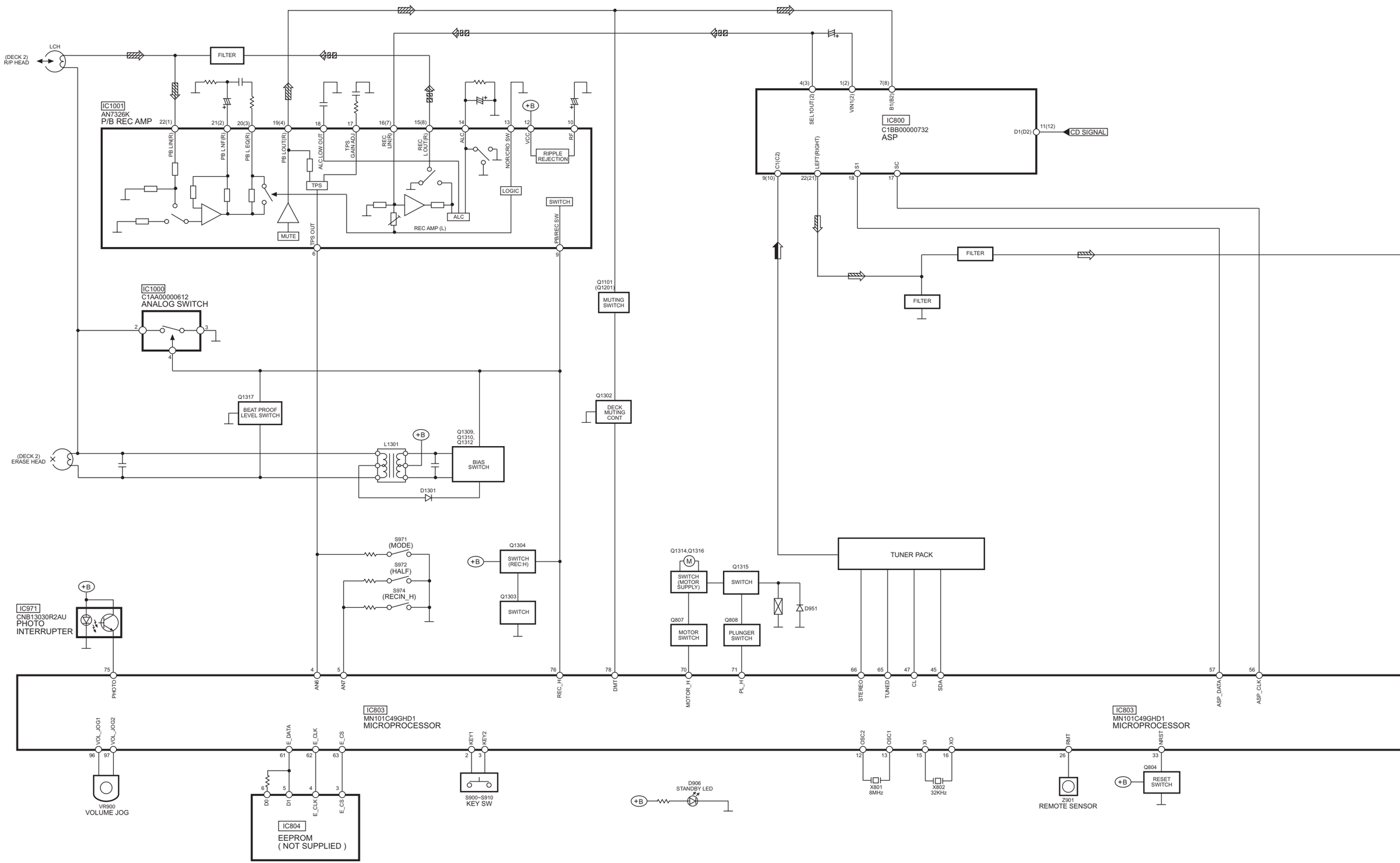
(DECK 2)
R/P HEAD
LCH
FILTER
IC1001
AN7326K
P/B REC AMP
PB LIN(R)
PB L NF(R)
PB L EQ(R)
PB LOUT(R)
ALC LOW OUT
TPS GAIN ADJ
REC LIN(R)
REC LOUT(R)
ALC
NOR/CRO SW
VCC
RF
RIPPLE REJECTION
TPS
LOGIC
SWITCH
MUTE
REC AMP (L)
TPS OUT
PB/REC SW
IC800
C1BB00000732
ASP
SEL1OUT(2)
VIN1(2)
B1(B2)
D1(D2)
CD SIGNAL
C1(C2)
LEFT(RIGHT)
S1
SC
IC1000
C1AA00000612
ANALOG SWITCH
Q1101
(Q1201)
MUTING SWITCH
Q1317
BEAT PROOF LEVEL SWITCH
Q1302
DECK MUTING CONT
(DECK 2)
ERASE HEAD
L1301
Q1309,
Q1310,
Q1312
BIAS SWITCH
D1301
S971
(MODE)
S972
(HALF)
S974
(RECIN_H)
Q1304
SWITCH (REC:H)
Q1303
SWITCH
Q1314,Q1316
SWITCH (MOTOR SUPPLY)
Q1315
SWITCH
D951
Q807
MOTOR SWITCH
Q808
PLUNGER SWITCH
TUNER PACK
IC971
CNB13030R2AU
PHOTO INTERRUPTER
PHOTO
AN6
AN7
REC_H
DMT
MOTOR_H
PL_H
STEREO
TUNED
CL
SDA
ASP_DATA
ASP_CLK
IC803
MN101C49GHD1
MICROPROCESSOR
VOL_JOG1
VOL_JOG2
VR900
VOLUME JOG
E_DATA
E_CLK
E_CS
D0
D1
IC804
EEPROM
( NOT SUPPLIED )
KEY1
KEY2
S900~S910
KEY SW
D906
STANDBY LED
OSC2
OSC1
X801
8MHz
XI
XO
X802
32KHz
RMT
Z901
REMOTE SENSOR
NRST
Q804
RESET SWITCH

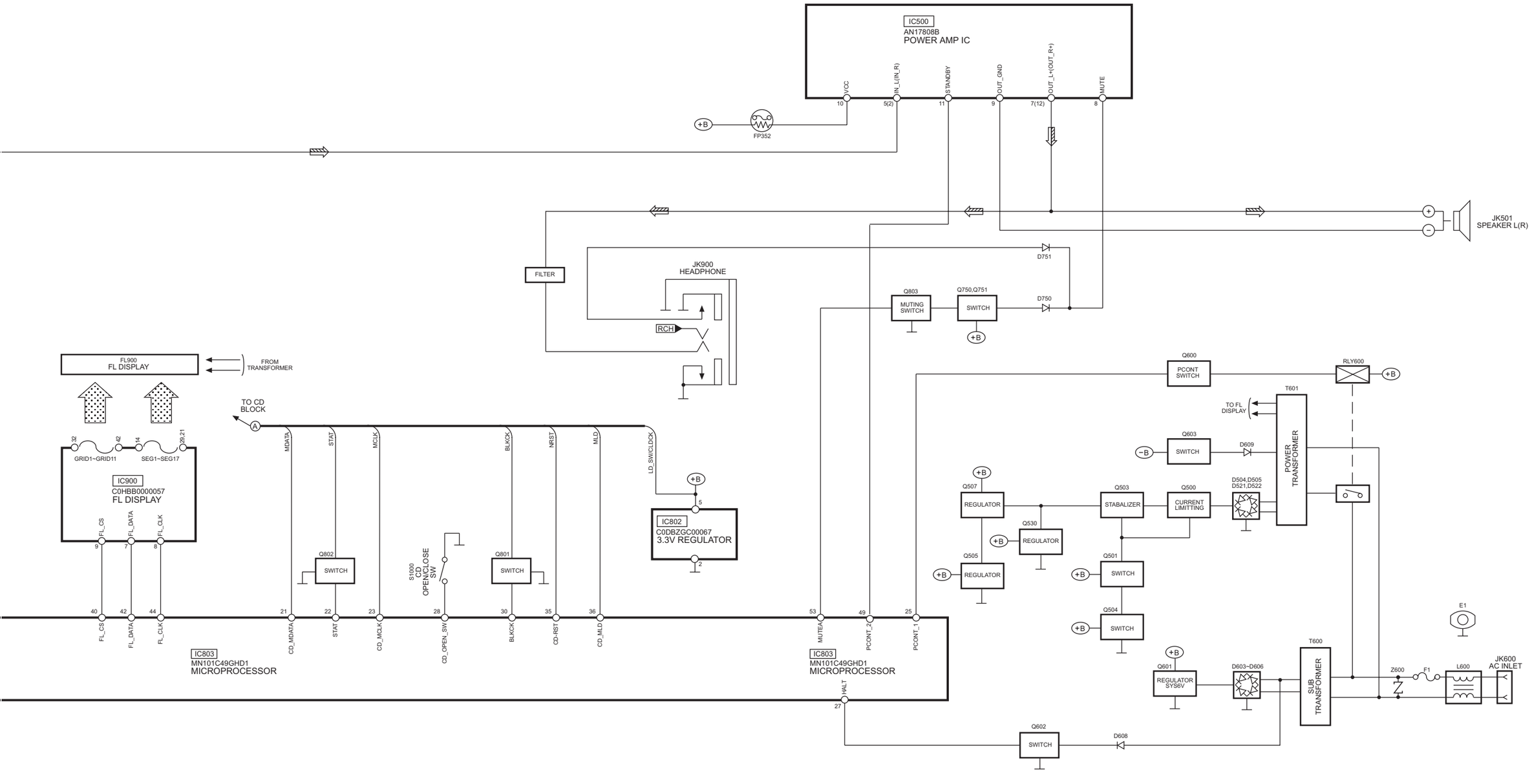
IC500
AN17808B
POWER AMP IC
VCC
IN_L(IN_R)
STANDBY
OUT_GND
OUT_L+(OUT_R+)
MUTE
+B
FP352
JK501
SPEAKER L(R)
D751
FILTER
JK900
HEADPHONE
RCH
Q803
MUTING SWITCH
Q750,Q751
SWITCH
D750
FL900
FL DISPLAY
FROM TRANSFORMER
TO CD BLOCK
GRID1~GRID11
SEG1~SEG17
IC900
C0HBB0000057
FL DISPLAY
FL_CS
FL_DATA
FL_CLK
MDATA
STAT
MCLK
BLKCK
NRST
MLD
LD_SW/CLDCK
Q802
SWITCH
S1000
CD OPEN/CLOSE SW
Q801
SWITCH
IC802
C0DBZGC00067
3.3V REGULATOR
CD_MDATA
CD_MCLK
CD_OPEN_SW
CD-RST
CD_MLD
IC803
MN101C49GHD1
MICROPROCESSOR
MUTEA
PCONT_2
PCONT_1
HALT
Q600
PCONT SWITCH
RLY600
T601
TO FL DISPLAY
POWER TRANSFORMER
Q603
SWITCH
D609
-B
Q507
REGULATOR
Q503
STABALIZER
Q500
CURRENT LIMITTING
D504,D505
D521,D522
Q530
REGULATOR
Q505
REGULATOR
Q501
SWITCH
Q504
SWITCH
E1
Q601
REGULATOR SYS6V
D603~D606
T600
SUB TRANSFORMER
Z600
F1
L600
JK600
AC INLET
Q602
SWITCH
D608